UMATILLA CITY COUNCIL MEETING
AGENDA
COUNCIL CHAMBERS 700 6TH STREET, UMATILLA, OR 97882
DECEMBER 7, 2021
7:00 PM

---

1. **MEETING CALLED TO ORDER**

2. **ROLL CALL**

3. **PLEDGE OF ALLEGIANCE**

4. **APPROVAL OF AGENDA**

5. **CITY MANAGER'S REPORT & ANNOUNCEMENTS**

6. **PUBLIC COMMENT** Public Comment is an opportunity for citizens to express opinions, raise issues, and provide information to the City Council. Comments presented during this segment should be on city-related issues and not on items that are scheduled for a Public Hearing on the same eveningâ€™s agenda. If you wish to speak, please provide the requested information on the Sign-Up Sheet, being sure to note the topic on which you will speak. When called to the podium, begin by stating your name and address. You will have five minutes to speak, unless otherwise instructed.

7. **CONSENT AGENDA**
   7.1 November Paid Invoices *Suggested Action: Motion to approve*

8. **PUBLIC HEARING**
   8.1 ODOT Quarry Plan Amendment (PA-2-21) - The applicant, Oregon Department of Transportation, is requesting to have their site located in the UGB be added to the City of Umatilla Comprehensive plan Goal 5 so their resource will be protected to allow mining, processing, and stockpiling. *Suggested Action:*

   The Planning Commission unanimously voted to recommend approval of PA-2-21 to the City Council at their November 23rd commission meeting. A sample motion is provided below, if approved staff will bring the adopting ordinance for consideration to the January 4, 2022 Council meeting.

   I move to approve ODOT Plan Amendment PA-2-21 and adopt the Planning Commissions findings.

9. **NEW BUSINESS**
   9.1 Local Business Grant Award *Suggested Action: Below is a summary of the grant applications received for this round of funding for the Local Business Grant program and the amount each business has requested:*

541 Wheels - a new business sign. $4,784.25

Acapulco Food Truck - a LED food menu monitor and new tortilla maker. $18,270.69

J & A Group DBA McNary Market - pavement for entirely new parking lot. $27,500

Kookee LLC, DBA Maple Moose Coffee Co - start-up funds for a new coffee shop. $27,500

LiteEm Up BBQ - new commercial equipment. $25,304.03

Umatilla Chamber of Commerce - improvements/equipment for business support. $6,291.75

Umatilla Speedwash - new commercial equipment. $27,500

Alaniz Auto Detail - land acquisition. $27,500

Quality Inn - new drapery. $21,107.55

Staff has reviewed the above applications for completeness, eligibility of grant program funds, and compliance with City Code and other relevant considerations and recommends the following for award (original request for reference):

Motion to approve the following applications for award listed below:

541 Wheels - ***$618.75*** *($4,784.25)*

Acapulco Food Truck - ***$18,270.69*** *($18,270.69)*

J & A Group - ***$27,500*** *($27,500)*

Kookee, LLC - ***$24,108.24*** *($27,500)*

Lite Em Up BBQ - ***$25,304.03*** *($25,304.03)*

Umatilla Chamber of Commerce - ***$2,865*** *($6,291.75)*

Umatilla Speedwash - ***$27,500*** *($27,500)*

Alaniz Auto Detail - ***$0*** *($27,500)*

Quality Inn - ***$0*** *($21,107.55)*

9.2 New Parks and Recreation Logo. *Suggested Action: As part of the City's effort to brand our parks and encourage increased participation in recreation and our programs, the Parks & Recreation Committee has worked together with staff and the community to create an all-new logo for our ever-expanding Parks & Recreation Department. Several logos*

have been considered over the past two years through the Committee's review process. This proposed new logo is recommended by the Committee and supported by staff. Staff seeks Council adoption of this new logo for use for our Parks & Recreation programs.

Motion to adopt new logo for the Parks and Recreation Department.

9.3 Cancellation of December 21, 2021 Workshop *Suggested Action: Motion to Cancel the December 21, 2021 City Council Workshop*

10. **PUBLIC COMMENT**

11. **DISCUSSION ITEMS**

11.1 Planning Commission Yearly Report *Suggested Action: November 2020-October 2021*

12. **MAYOR'S MESSAGE**

13. **COUNCIL INFORMATION & DISCUSSION**

14. **ADJOURN** This institution is an equal opportunity provider. Discrimination is prohibited by Federal law. Special accommodations to attend or participate in a city meeting or other function can be provided by contacting City Hall at (541) 922-3226 or use the TTY Relay Service at 1-800-735-2900 for appropriate assistance.

This institution is an equal opportunity provider. Discrimination is prohibited by Federal law. Special accommodations to attend or participate in a city meeting or other function can be provided by contacting City Hall at (541) 922-3226 or use the TTY Relay Service at 1-800-735-2900 for appropriate assistance.

CITY OF UMATILLA, OREGON

AGENDA BILL

Agenda Title:	**Meeting Date:**
November Paid Invoices	2021-12-07

Department:	**Director:**	**Contact Person:**	**Phone Number:**
Finance & Administrative Services	Melissa Ince	Melissa ince	

Cost of Proposal:	**Fund(s) Name and Number(s):**
N/A **Amount Budgeted:** N/A	N/A

Reviewed by Finance Department:	**Previously Presented:**
Yes	N/A

Attachments to Agenda Packet Item:

November 2021 Paid Invoices.pdf

Summary Statement:

Motion to approve

Consistent with Council Goals:

Goal 4: Increase Public Involvement, Create a Culture of Transparency with the Public, and Enhance Cultural Diversity.

Report Criteria:
Detail report type printed

Vendor Number	Name	Invoice Number	Description	Invoice Date	Invoice Amount	Check Number	Check Issue Date
7							
7	A & M Supply	PICKTICKET	Golf Course Supplies	08/25/21	29.92	47861	11/18/21
Total 7:					29.92		
13							
13	A-1 Industrial Hose & Supply	278408	Marina Supplies	11/11/21	20.06	47862	11/18/21
		278894	Supplies for Water Dept.	11/15/21	50.31	47862	11/18/21
		280022	Parks Supplies	11/23/21	37.57	47912	11/30/21
Total 13:					107.94		
73							
73	American Fencing	3	Nugent Fencing	11/10/21	265.00	47863	11/18/21
Total 73:					265.00		
148							
148	Banner Bank Mastercard	0715.10.24.2	Lunch Meeting-golf course staff	10/24/21	58.41	47864	11/18/21
		0715.10.24.2	Misc. Tools for Office Staff	10/24/21	245.98	47864	11/18/21
		0715.10.24.2	Lunch Meeting with JUB	10/24/21	5.43	47864	11/18/21
		0715.10.24.2	Lunch Meeting with JUB	10/24/21	5.42	47864	11/18/21
		0715.10.24.2	Lunch Meeting with JUB	10/24/21	5.42	47864	11/18/21
		0715.10.24.2	Lunch Meeting with JUB	10/24/21	5.42	47864	11/18/21
		0715.10.24.2	Lunch Meeting with Leon	10/24/21	8.00	47864	11/18/21
		0715.10.24.2	Lunch Meeting with Leon	10/24/21	8.00	47864	11/18/21
		0715.10.24.2	Lunch Meeting with Leon	10/24/21	8.00	47864	11/18/21
		0715.10.24.2	Lunch Meeting with Leon	10/24/21	8.00	47864	11/18/21
		0715.10.24.2	Lunch Meeting with Brandon	10/24/21	10.00	47864	11/18/21
		0715.10.24.2	Lunch Meeting with Brandon	10/24/21	10.00	47864	11/18/21
		0715.10.24.2	Lunch Meeting with Brandon	10/24/21	10.00	47864	11/18/21
		0715.10.24.2	Lunch Meeting with Brandon	10/24/21	10.00	47864	11/18/21
		0715.10.24.2	Dinner Meeting with Umatilla Yacht Club	10/24/21	17.41	47864	11/18/21
		0715.10.24.2	Dinner Meeting with Umatilla Yacht Club	10/24/21	17.40	47864	11/18/21
		0715.10.24.2	Dinner Meeting with Umatilla Yacht Club	10/24/21	17.40	47864	11/18/21
		0715.10.24.2	Dinner Meeting with Umatilla Yacht Club	10/24/21	17.40	47864	11/18/21
		1102.10.24.2	Keyboard for Marisela	10/24/21	89.77	47864	11/18/21
		1102.10.24.2	Prime Membership-Library	10/24/21	1.99	47864	11/18/21
		1102.10.24.2	Varidesk-Jacob	10/24/21	159.99	47864	11/18/21
		1102.10.24.2	SMARSH	10/24/21	1,718.93	47864	11/18/21
		1102.10.24.2	Prime Membership-Library	10/24/21	12.99	47864	11/18/21
		1102.10.24.2	Keys-Golf Coures	10/24/21	3.98	47864	11/18/21

Vendor Number	Name	Invoice Number	Description	Invoice Date	Invoice Amount	Check Number	Check Issue Date
		1102.10.24.2	Library Supplies	10/24/21	68.98	47864	11/18/21
		1102.10.24.2	Flags for Parks Dept.	10/24/21	253.65	47864	11/18/21
		1102.10.24.2	Library Supplies	10/24/21	12.07	47864	11/18/21
		1102.10.24.2	Library Office Supplies	10/24/21	8.99	47864	11/18/21
		1102.10.24.2	Fishing Line for Halloween	10/24/21	7.26	47864	11/18/21
		1102.10.24.2	Marina Supplies	10/24/21	19.98	47864	11/18/21
		1102.10.24.2	Paper for printer	10/24/21	518.49	47864	11/18/21
		1102.10.24.2	Amazon-supplies	10/24/21	23.22	47864	11/18/21
		1102.10.24.2	Amazon-Supplies	10/24/21	16.99	47864	11/18/21
		2217.10.24.2	OACP Conference Dinner-Huxel	10/24/21	35.49	47781	11/12/21
		2217.10.24.2	Holiday Inn Express-OACP Conference Huxel	10/24/21	206.40	47781	11/12/21
		2217.10.24.2	TLO Transunion	10/24/21	75.00	47781	11/12/21
		2217.10.24.2	Amazon-Flag	10/24/21	12.07	47781	11/12/21
		2217.10.24.2	ELSI Legal-Training Kennedy	10/24/21	199.00	47781	11/12/21
		2217.10.24.2	ELSI Legal-training-wright	10/24/21	199.00	47781	11/12/21
		2217.10.24.2	ELSI Legal-Training Tovey	10/24/21	199.00	47781	11/12/21
		2217.10.24.2	Carlton-training Capers	10/24/21	199.00	47781	11/12/21
		2217.10.24.2	Carlton-training Vandever	10/24/21	199.00	47781	11/12/21
		2217.10.24.2	Carlton-training Skillman	10/24/21	199.00	47781	11/12/21
		2217.10.24.2	Credit-OACP Conference dinner	10/24/21	1.42-	47781	11/12/21
		2970.10.24.2	NRPA Confernce-SeitzRPA Luggage-Seitz, Foreman, Perches	10/24/21	90.00	47781	11/12/21
		2970.10.24.2	NRPA Hotel-Foreman/Perches	10/24/21	1,605.48	47781	11/12/21
		2970.10.24.2	OPTA Membership	10/24/21	40.00	47781	11/12/21
		2970.10.24.2	Band for Winterfest	10/24/21	991.00	47781	11/12/21
		2970.10.24.2	Button Maker	10/24/21	108.58	47781	11/12/21
		2970.10.24.2	Varidesk-Rodriguez	10/24/21	415.00	47781	11/12/21
		2970.10.24.2	VINYL	10/24/21	135.19	47781	11/12/21
		2970.10.24.2	Monday Subscription	10/24/21	600.00	47781	11/12/21
		2970.10.24.2	Adobe Photoshop Subs	10/24/21	20.99	47781	11/12/21
		3132.10.24.2	IWW Samples	10/24/21	601.75	47781	11/12/21
		3132.10.24.2	Corwin Ford TriCities	10/24/21	708.39	47781	11/12/21
		3132.10.24.2	Corwin Ford TriCities	10/24/21	708.40	47781	11/12/21
		3132.10.24.2	Corwin Ford TriCities	10/24/21	708.40	47781	11/12/21
		3132.10.24.2	Corwin Ford TriCities	10/24/21	708.40	47781	11/12/21
		3132.10.24.2	MeterBatteries	10/24/21	240.00	47781	11/12/21
		3132.10.24.2	Propane for Forklift	10/24/21	45.14	47781	11/12/21
		3132.10.24.2	IWW Samples	10/24/21	492.28	47781	11/12/21
		5571.10.24.2	NRPA Confernce-Seitz	10/24/21	802.74	47781	11/12/21
		5571.10.24.2	Airport Parking	10/24/21	40.00	47781	11/12/21
		5571.10.24.2	OAPA Conference-Foutz	10/24/21	270.00	47781	11/12/21
		5571.10.24.2	County Recording Fees	10/24/21	4.00	47781	11/12/21
		5571.10.24.2	Planning Dept. Lucheon	10/24/21	95.96	47781	11/12/21
		5919.10.24.2	Indeed Job Postings	10/24/21	126.91	47781	11/12/21
		5919.10.24.2	OLCC Lincense-Kennedy	10/24/21	26.00	47781	11/12/21
		5919.10.24.2	Halloween	10/24/21	1,394.66	47781	11/12/21
		5919.10.24.2	Staff Meeting	10/24/21	58.19	47781	11/12/21
		5919.10.24.2	Golf Course Monitor	10/24/21	349.22	47781	11/12/21

Vendor Number	Name	Invoice Number	Description	Invoice Date	Invoice Amount	Check Number	Check Issue Date
		5919.10.24.2	SHRM Membership	10/24/21	219.00	47781	11/12/21
		5919.10.24.2	Boli Conference Registration	10/24/21	350.00	47781	11/12/21
		5919.10.24.2	ORCPP Annual Dues	10/24/21	900.00	47781	11/12/21
		6777.10.24.2	ICMA Annual Membership	10/24/21	1,231.00	47864	11/18/21
		6777.10.24.2	Halloween-Trick 'O Treat on Main	10/24/21	76.95	47864	11/18/21
		6777.10.24.2	Halloween-Trick 'o Treat On Main	10/24/21	15.12	47864	11/18/21
		6777.10.24.2	Admin.	10/24/21	20.00	47864	11/18/21
		7126.10.24.2	Proshop retail	10/24/21	99.96	47781	11/12/21
		7126.10.24.2	Proshop retail	10/24/21	256.27	47781	11/12/21
		7126.10.24.2	Proshop retail	10/24/21	318.00	47781	11/12/21
		7126.10.24.2	Proshop retail	10/24/21	198.28	47781	11/12/21
		7126.10.24.2	Proshop retail	10/24/21	1,001.10	47781	11/12/21
		7126.10.24.2	Golf Cart Maint.	10/24/21	5,385.10	47781	11/12/21
		7126.10.24.2	Proshop retail	10/24/21	132.25	47781	11/12/21
		7126.10.24.2	Supplies	10/24/21	6.76	47781	11/12/21
		7126.10.24.2	Golf Cart Maint	10/24/21	916.50	47781	11/12/21
		7126.10.24.2	Proshop retail	10/24/21	129.99	47781	11/12/21
		7126.10.24.2	office supplies	10/24/21	111.00	47781	11/12/21
		7126.10.24.2	supplies	10/24/21	26.93	47781	11/12/21
		7126.10.24.2	Proshop retail	10/24/21	99.95	47781	11/12/21
		7126.10.24.2	supplies	10/24/21	14.97	47781	11/12/21
		7126.10.24.2	Retail for proshop	10/24/21	285.00	47781	11/12/21
		8328.10.24.2	Privacy Tint Marisela	10/24/21	9.99	47781	11/12/21
		8328.10.24.2	Earbuds marisela	10/24/21	29.95	47781	11/12/21
		8328.10.24.2	Privacy Screen Marisela	10/24/21	99.98	47781	11/12/21
		8328.10.24.2	Privacy Tint Marisela	10/24/21	9.99	47781	11/12/21
		8328.10.24.2	Surface Upgrade	10/24/21	99.00	47781	11/12/21
		8328.10.24.2	Privacy Screen Jonathan	10/24/21	99.98	47781	11/12/21
		8328.10.24.2	Extension Cable-John	10/24/21	6.98	47781	11/12/21
		8328.10.24.2	Earbuds for Hannah	10/24/21	24.92	47781	11/12/21
		8328.10.24.2	Earbuds for Jonathan	10/24/21	24.91	47781	11/12/21
		8328.10.24.2	Logmein	10/24/21	20.34	47781	11/12/21
		8328.10.24.2	Logmein	10/24/21	6.78	47781	11/12/21
		8328.10.24.2	Logmein	10/24/21	6.78	47781	11/12/21
		8328.10.24.2	Logmein	10/24/21	6.78	47781	11/12/21
		8328.10.24.2	Logmein	10/24/21	210.17	47781	11/12/21
		8328.10.24.2	Logmein	10/24/21	6.78	47781	11/12/21
		8328.10.24.2	Logmein	10/24/21	20.34	47781	11/12/21
		8328.10.24.2	Logmein	10/24/21	6.78	47781	11/12/21
		8328.10.24.2	Zoom Annual License	10/24/21	449.70	47781	11/12/21
		8336.10.24.2	Amazon Paper Towels, Batteries Etc	10/24/21	79.44	47781	11/12/21
		8336.10.24.2	Amazon-Candy Red Ribbon Week (SRO)	10/24/21	28.37	47781	11/12/21
		8336.10.24.2	Blauer-Uniforms	10/24/21	639.92	47781	11/12/21
		8336.10.24.2	Galls-Uniforms	10/24/21	390.91	47781	11/12/21
		8336.10.24.2	Amazon-Scissors and Calendars	10/24/21	104.03	47781	11/12/21
		8336.10.24.2	Amazon-Calendars	10/24/21	23.94	47781	11/12/21
		8336.10.24.2	Uline-File Cabinets	10/24/21	841.54	47781	11/12/21

Vendor Number	Name	Invoice Number	Description	Invoice Date	Invoice Amount	Check Number	Check Issue Date
	Total 148:				31,335.62		
222							
222	Boardman Lock & Key	9419	Waste Water Diversion Structure Door Repair	10/21/21	60.00	47783	11/12/21
	Total 222:				60.00		
276							
276	Builders FirstSource	84259958	Golf Course	10/06/21	126.72	47865	11/18/21
		84357855	Nugent Park	10/22/21	32.56	47785	11/12/21
	Total 276:				159.28		
291							
291	Business Oregon	12.01.2021-A	SPECIAL PUBLIC WORKS FUND	12/01/21	4,563.63	47911	11/18/21
		12.01.2021-A	SPECIAL PUBLIC WORKS FUND	12/01/21	62,641.61	47911	11/18/21
		12.01.2021-B	SPECIAL PUBLIC WORKS FUND	12/01/21	16,962.51	47866	11/18/21
		12.01.2021-B	SPECIAL PUBLIC WORKS FUND	12/01/21	11,933.99	47866	11/18/21
	Total 291:				96,101.74		
320							
320	Canon Solutions America, Inc	4037805682	COPIER MAINTENANCE	10/24/21	86.65	47786	11/12/21
		4037816637	COPIER MAINTENANCE	10/26/21	29.98	47786	11/12/21
	Total 320:				116.63		
351							
351	Cascade Natural Gas Corp.	1092.10.26.2	700 6th St.	10/26/21	24.19	47787	11/12/21
		1092.10.26.2	700 6th St.	10/26/21	24.19	47787	11/12/21
		1092.10.26.2	700 6th St.	10/26/21	24.18	47787	11/12/21
		3033.10.27.2	82959 Draper St.	10/27/21	12.61	47787	11/12/21
		7846.10.26.2	830 6th St.	10/26/21	99.82	47787	11/12/21
		7851.10.26.2	822 6TH ST.	10/26/21	12.61	47787	11/12/21
		8476.10.26.2	1205 W 3RD St.	10/26/21	43.95	47787	11/12/21
	Total 351:				241.55		
353							
353	Caselle, Inc.	112777	CONNECT APPLICATION SOFTWARE:COUR CITATION IMPORT	10/27/21	1,600.00	47788	11/12/21
	Total 353:				1,600.00		
355							
355	Casiday Battery Co.	13719	Street Equipment Operation-Battery	10/05/21	279.90	47789	11/12/21

Vendor Number	Name	Invoice Number	Description	Invoice Date	Invoice Amount	Check Number	Check Issue Date
	Total 355:				279.90		
362							
362	Center Point Large Print	1887712	Large Print Books for Library	11/01/21	47.94	47867	11/18/21
	Total 362:				47.94		
367							
367	CenturyLink	678B.10.25.2	Police Dept Phones	10/25/21	91.08	47790	11/12/21
	Total 367:				91.08		
391							
391	CI INFORMATION MANAGMEN	0121305	Onsite document shred	07/31/21	48.78	47914	11/30/21
		0124282	Onsite document shred	09/30/21	47.33	47914	11/30/21
		0124283	Onsite document shred	09/30/21	47.33	47914	11/30/21
		0125733	SHRED SERVICES	10/31/21	47.03	47914	11/30/21
		0125734	Onsite document shred	10/31/21	47.03	47914	11/30/21
	Total 391:				237.50		
435							
435	Commercial Tire	275294	Snow tire change over	11/08/21	90.00	47868	11/18/21
		275304	Snow tire change over	11/09/21	90.00	47868	11/18/21
		275323	Snow tire change over	11/10/21	90.00	47868	11/18/21
		275628	Police Dept. Brake Service	11/18/21	755.87	47915	11/30/21
		275803	Public Works-Tire	11/24/21	223.74	47915	11/30/21
		275803	Public Works-Tires	11/24/21	223.75	47915	11/30/21
		275803	Public Works-Tires	11/24/21	223.75	47915	11/30/21
		275803	Public Works-Tires	11/24/21	223.74	47915	11/30/21
		275804	Tire Repair Parks	11/24/21	201.24	47915	11/30/21
	Total 435:				2,122.09		
439							
439	Concrete Special Ties, Inc.	68814	Nugent Park Bathroom	10/20/21	110.80	47794	11/12/21
		69751	Christmas Decor	11/23/21	88.19	47916	11/30/21
	Total 439:				198.99		
440							
440	Confederated Tribes Umatilla	24200	Water Meater Replacement -Industrial WW Project	11/05/21	797.97	47869	11/18/21
	Total 440:				797.97		
487							
487	Crystal Clear Ice, LLC	20-104083	Ice for Marina Resale	10/26/21	112.00	47795	11/12/21
	Total 487:				112.00		

Vendor Number	Name	Invoice Number	Description	Invoice Date	Invoice Amount	Check Number	Check Issue Date
488							
488	Crystal Springs	2150670709	Water for Marina	09/23/21	74.73	47796	11/12/21
		92629401110	Water for Police Department	11/10/21	103.39	47870	11/18/21
	Total 488:				178.12		
550							
550	DEQ - Dept. of Environmental Q	MENDOZA2	Cert. Renewal 2022-2023	11/30/21	160.00	47917	11/30/21
	Total 550:				160.00		
559							
559	Devin Oil Company Inc	0328505-IN	Public Works Fuel	10/29/21	572.52	47873	11/18/21
		0328505-IN	Public Works Fuel	10/29/21	572.52	47873	11/18/21
		0328505-IN	Public Works Fuel	10/29/21	572.52	47873	11/18/21
		0328505-IN	Public Works Fuel	10/29/21	572.52	47873	11/18/21
		328308	Golf Course Fuel	10/06/21	550.19	47873	11/18/21
		328581	Golf Course Fuel	11/09/21	300.93	47873	11/18/21
		CL62893	Public Works Fuel	10/31/21	465.16	47873	11/18/21
		CL62893	Public Works Fuel	10/31/21	465.16	47873	11/18/21
		CL62893	Public Works Fuel	10/31/21	465.16	47873	11/18/21
		CL62893	Public Works Fuel	10/31/21	465.15	47873	11/18/21
		CL62894	PD Fuel	10/31/21	1,644.60	47873	11/18/21
		CL63126	Public Works Fuel	11/15/21	174.39	47918	11/30/21
		CL63126	Public Works Fuel	11/15/21	174.39	47918	11/30/21
		CL63126	Public Works Fuel	11/15/21	174.39	47918	11/30/21
		CL63126	Public Works Fuel	11/15/21	174.39	47918	11/30/21
		CL63127	PD Fuel	11/15/21	1,491.12	47918	11/30/21
	Total 559:				8,835.11		
573							
573	Dike, Karen	BROWN2021	Background Investigation-Brown	10/14/21	500.00	Multiple	Multiple
	Total 573:				500.00		
607							
607	Ducote Consulting	1715	Grand Admin, CDBG Sewer Final Design	10/29/21	761.25	47798	11/12/21
		1716	Grant Admin-CDBG	10/29/21	63.75	47798	11/12/21
		1717	EDA Business Center	10/29/21	180.00	47798	11/12/21
		1717	EDA Business Center	10/29/21	180.00	47798	11/12/21
	Total 607:				1,185.00		
628							
628	East Oregonian	269339	planning commission meeting notice	11/15/21	346.52	47921	11/30/21
	Total 628:				346.52		

Vendor Number	Name	Invoice Number	Description	Invoice Date	Invoice Amount	Check Number	Check Issue Date
635							
635	Eastern Oregon Telecom, LLC	0317.11.01.2	Golf Course	11/01/21	103.41	47799	11/12/21
		8743.11.01.2	Marina Internet	11/01/21	246.50	47799	11/12/21
		8743.11.01.2	City Library	11/01/21	236.94	47799	11/12/21
		8743.11.01.2	Police Dept. Internet	11/01/21	237.94	47799	11/12/21
		8743.11.01.2	City Shop	11/01/21	72.34	47799	11/12/21
		8743.11.01.2	WWTP Internet	11/01/21	310.28	47799	11/12/21
		8743.11.01.2	City Hall Internet	11/01/21	39.68	47799	11/12/21
		8743.11.01.2	City Hall Internet	11/01/21	13.22	47799	11/12/21
	Total 635:				1,260.31		
659							
659	Elmer's Irrigation & Supply	306040	Golf Course Supplies	10/05/21	1,200.00	47800	11/12/21
	Total 659:				1,200.00		
674							
674	EOTEC	3RD QTR 20	tourism Promotion Assessment	11/01/21	7,326.54	47801	11/12/21
	Total 674:				7,326.54		
720							
720	FERGUSON WATERWORKS #3	1025410	Water Dept. Supplies	11/22/21	1,470.36	47923	11/30/21
		1042327	Water Dept. Supplies	10/26/21	350.00	47802	11/12/21
	Total 720:				1,820.36		
723							
723	Graybeal Group, Inc.	1482	Marina Fuel Tank Insurance Premium	11/09/21	2,282.08	47877	11/18/21
	Total 723:				2,282.08		
854							
854	Gordon's Electric Inc.	W16260	Street Light Maint.	10/27/21	400.00	47804	11/12/21
		W16346	Repair Intertie Well	11/15/21	781.28	47926	11/30/21
		W16347	Power for Village Square Park	11/15/21	2,908.58	47926	11/30/21
	Total 854:				4,089.86		
856							
856	Gotcha Covered	345803	Cleaning Services	11/01/21	443.84	47805	11/12/21
		345803	Cleaning Services	11/01/21	383.98	47805	11/12/21
		345803	Cleaning Services	11/01/21	383.98	47805	11/12/21
		345803	Cleaning Services	11/01/21	248.20	47805	11/12/21
	Total 856:				1,460.00		
862							
862	Grainger Inc.	4907.11.01.2	Supplies	10/28/21	141.08	47875	11/18/21

Vendor Number	Name	Invoice Number	Description	Invoice Date	Invoice Amount	Check Number	Check Issue Date
Total 862:					141.08		
864							
864	Granite Construction Company	2095324	Paving & Supplies-golf course	09/03/21	3,550.00	47927	11/30/21
		60028046	golf Course Asphalt	11/10/21	311.20	47876	11/18/21
		60028062	golf Course Asphalt	11/10/21	357.60	47876	11/18/21
		60028080	golf Course Asphalt	11/10/21	261.60	47876	11/18/21
Total 864:					4,480.40		
905							
905	H.D. Fowler Company	I5941616	Water Dept Supplies Meters etc	10/21/21	1,735.34	47806	11/12/21
Total 905:					1,735.34		
966							
966	Hermiston Auto Parts, Inc.	1264OCT21	Waste Water Dept	11/01/21	5.56	47807	11/12/21
		1264OCT21	Water Dept	11/01/21	5.56	47807	11/12/21
		1264OCT21	Golf Course	11/01/21	5.56	47807	11/12/21
		1264OCT21	Parks	11/01/21	5.56	47807	11/12/21
		1264OCT21	streets	11/01/21	5.56	47807	11/12/21
		616179	Golf Course	06/21/21	63.99	47807	11/12/21
		621086	Water Dept Supplies	10/25/21	13.77	47807	11/12/21
		621459	Water Dept	11/05/21	17.10	47878	11/18/21
		873362	Golf Course	09/20/21	114.97	47807	11/12/21
Total 966:					237.63		
980							
980	Hermiston Quicky Lube	501951	Oil Change	11/11/21	11.99	47808	11/12/21
		501951	Oil Change	11/11/21	11.98	47808	11/12/21
		501951	Oil Change	11/11/21	11.99	47808	11/12/21
		501951	Oil Change	11/11/21	11.99	47808	11/12/21
		502594	Oil Change	11/12/21	47.95	47879	11/18/21
		502937	Oil Change	11/16/21	66.90	47928	11/30/21
Total 980:					162.80		
994							
994	High Performance Signs	25618	Decals for Mini Excavator	11/12/21	22.50	47931	11/30/21
		25618	Decals for Mini Excavator	11/12/21	22.50	47931	11/30/21
		25618	Decals for Mini Excavator	11/12/21	22.50	47931	11/30/21
		25618	Decals for Mini Excavator	11/12/21	22.50	47931	11/30/21
Total 994:					90.00		
1012							
1012	Home Depot Credit Services	2042961	City Hall Repair	09/27/21	95.47	47812	11/12/21
		5620403	Halloween Supplies	10/04/21	74.14	47812	11/12/21
		5620409	Halloween Supplies	10/04/21	63.41	47812	11/12/21

Vendor Number	Name	Invoice Number	Description	Invoice Date	Invoice Amount	Check Number	Check Issue Date
		5620411	Halloween Supplies	10/04/21	96.84	47812	11/12/21
		7044201	Marina Supplies	10/12/21	412.83	47812	11/12/21
Total 1012:					742.69		
1060							
1060	Ingram	55558460	Library Books	10/27/21	34.19	47813	11/12/21
		55558461	Library Books	10/27/21	31.79	47813	11/12/21
		55558462	Library Books	10/27/21	17.97	47813	11/12/21
		55558463	Library Books	10/27/21	9.75	47813	11/12/21
		55558464	Library Books	10/27/21	16.80	47813	11/12/21
		55558465	Library Books	10/27/21	315.75	47813	11/12/21
		55558466	Library Books	10/27/21	11.39	47813	11/12/21
Total 1060:					437.64		
1068							
1068	Intermountain ESD	598T074479	varidesk-PD	10/13/21	329.99	47814	11/12/21
		598T074479	varidesk Library	10/13/21	329.99	47814	11/12/21
		598T074555	varidesk Monitor Arm-Marisela and John R.	09/27/21	283.64	47814	11/12/21
		598T074740	Library Computers	11/02/21	9,424.58	47814	11/12/21
		598T074818	Ice Skating Rink supplies	10/29/21	495.64	47814	11/12/21
		598T074872	Skating rink P.O.S. system	10/29/21	585.88	47880	11/18/21
		598T074944	Skating rink	11/10/21	2,363.16	47933	11/30/21
Total 1068:					13,812.88		
1089							
1089	J U B Engineers, Inc.	0470410	Wanapa Road and Utlities	11/24/21	2,713.92	47935	11/30/21
		147852	Umatilla Wastewater Facilities Plan	11/11/21	14,914.80	47881	11/18/21
		148148	Umatilla Water Master Plan	11/23/21	896.78	47935	11/30/21
		148152	Cityof Umatilla-Risk and Resilience Assessment	11/23/21	1,371.20	47935	11/30/21
		148190	Umatilla-Business Center	11/23/21	946.25	47935	11/30/21
		148190	Umatilla Business Center	11/23/21	946.25	47935	11/30/21
		148191	Umatilla On-Call Engineering	11/23/21	2,664.28	47935	11/30/21
		148191	Umatilla On-Call Engineering	11/23/21	2,664.27	47935	11/30/21
		148192	Umatilla Phase 1 Construction Management	11/23/21	120.02	47935	11/30/21
		148193	Power City-Brownell Water Improvement	11/23/21	26,907.87	47935	11/30/21
		148194	Power City Brownell Sewer Improvements	11/23/21	12,948.50	47935	11/30/21
		148198	Umatilla-Cleaver Partition Plat and Easements	11/23/21	2,453.80	47935	11/30/21
		148203	Umatilla Hash Park Concept	11/23/21	1,070.00	47935	11/30/21
		148204	Umatilla Marina Concept	11/23/21	4,747.50	47935	11/30/21
		148256	Umatilla Pedestrian Bridge and Waterline	11/24/21	675.81	47935	11/30/21

Vendor Number	Name	Invoice Number	Description	Invoice Date	Invoice Amount	Check Number	Check Issue Date
		148256	Umatilla Pedestrian Bridge and Waterline	11/24/21	837.99	47935	11/30/21
Total 1089:					76,879.24		
1099							
1099	James C. Fulper dba Health Opt	97283	Hepatitis B Vaccine-Bighill	10/29/21	41.67	47882	11/18/21
		97283	Hepatitis B. Vaccine/Injection	10/29/21	41.66	47882	11/18/21
Total 1099:					83.33		
1112							
1112	Jimmy's Johns Portable Toilets L	15693	Marina & RV Park - Monthly Unit	11/01/21	195.00	47936	11/30/21
		15694	nugent park	11/01/21	185.00	47936	11/30/21
Total 1112:					380.00		
1141							
1141	Jones-Scott co.	46323	Nugent Park Restroom	10/29/21	159.90	47883	11/18/21
Total 1141:					159.90		
1187							
1187	Kids Reference Co.	KRC11-1036	Books for Library	11/02/21	158.38	47937	11/30/21
Total 1187:					158.38		
1189							
1189	KIE Supply Corp	2049795	Golf Course	08/19/21	394.13	47816	11/12/21
		2053492	Sprinkler Parts	11/04/21	58.53	47816	11/12/21
		2053502	Nugent Park	11/04/21	64.63	47816	11/12/21
		2053567	Nugent Park	11/05/21	57.77	47884	11/18/21
Total 1189:					575.06		
1211							
1211	Krogh, Theresa	NOVEMBER	Weddings	11/30/21	200.00	47938	11/30/21
Total 1211:					200.00		
1226							
1226	L.N. Curtis and Sons	675616	PD Uniform	11/03/21	109.22	47939	11/30/21
		INV543779	PD Uniform	11/15/21	129.04	47939	11/30/21
Total 1226:					238.26		
1234							
1234	Lamoreaux, Kellie	HALLOWEE	Halloween Programing-reimbursement	11/01/21	12.00	47817	11/12/21

Vendor Number	Name	Invoice Number	Description	Invoice Date	Invoice Amount	Check Number	Check Issue Date
Total 1234:					12.00		
1257							
1257	LEHR	S164563	OUTFIT POLICE VEHICLE	08/19/21	539.94	47818	11/12/21
		S166350	OUTFIT POLICE VEHICLE	10/06/21	487.88	47818	11/12/21
		S166351	OUTFIT POLICE VEHICLE	10/06/21	487.88	47818	11/12/21
		S167024	OUTFIT POLICE VEHICLE	10/25/21	477.98	47818	11/12/21
Total 1257:					1,993.68		
1362							
1362	Martin Business Systems	15174	Utility Forms	10/13/21	351.13	47886	11/18/21
		15174	Utility Forms	10/13/21	351.13	47886	11/18/21
Total 1362:					702.26		
1539							
1539	NEIGHBORS, JACOB & TIFFAN	SLIPRELEA	Slip Release B9	11/22/21	100.00	47942	11/30/21
Total 1539:					100.00		
1561							
1561	Norco Inc.	33296918	Water Dept. Supplies	10/15/21	94.55	47822	11/12/21
		33398056	Parks supplies	10/29/21	139.35	47822	11/12/21
		33399574	Streets Supplies	10/29/21	77.26	47822	11/12/21
		33419369	Cylinder Rental	10/31/21	46.81	47822	11/12/21
		33419369	Cylinder Rental	10/31/21	46.81	47822	11/12/21
Total 1561:					404.78		
1563							
1563	North Coast Electric Co.	S011282421.	Water Dept. Supplies	10/22/21	151.36	47823	11/12/21
Total 1563:					151.36		
1580							
1580	NW Farm Supply Inc.	2109-146981	Golf Course Supplies	09/07/21	44.16	47887	11/18/21
		2109-147892	Street supplies	09/09/21	178.42	47887	11/18/21
		2110-161838	Halloween Supplies	10/13/21	27.96	47824	11/12/21
		2111-178911	Golf Course Supplies	11/23/21	51.96	47944	11/30/21
Total 1580:					302.50		
1615							
1615	One Call Concepts, Inc.	1080509	Regular Tickets, Modem Delivery	08/31/21	43.20	47888	11/18/21
		1090511	Regular Tickets, Modem Delivery	09/30/21	20.40	47888	11/18/21
		1100508	Regular Tickets, Modem Delivery	10/31/21	40.80	47825	11/12/21

Vendor Number	Name	Invoice Number	Description	Invoice Date	Invoice Amount	Check Number	Check Issue Date
Total 1615:					104.40		
1636							
1636	Oregon Dept of Revenue	OCT.ASSES	State Court Assessments	11/01/21	20,573.27	47826	11/12/21
Total 1636:					20,573.27		
1640							
1640	Oregon Government Ethics Com	AIE14820	Annual biling govmt ethics	11/03/21	658.59	47889	11/18/21
Total 1640:					658.59		
1657							
1657	Oriental Trading Company	713275355-0	Programming Supplies	11/16/21	51.97	47945	11/30/21
Total 1657:					51.97		
1676							
1676	OXARC Inc.	31391075	Fire Ext. Recharge Public Works	10/25/21	375.63	47827	11/12/21
		31391075	Fire Ext. Recharge PD	10/25/21	375.63	47827	11/12/21
		31391076	Fire Ext. Recharge City Hall	10/25/21	36.21	47827	11/12/21
		31391077	Fire Ext. Recharge PD	10/25/21	529.00	47827	11/12/21
		31393737	Caution Tape-Parks	10/31/21	111.83	47890	11/18/21
		31393854	Street Dept. Supplies	10/29/21	122.41	47890	11/18/21
Total 1676:					1,550.71		
1684							
1684	Pacific Power	0010.11.15.2	820 6th St.	11/15/21	52.54	47946	11/30/21
		0013.11.15.2	Highway 395 & 730 Interti Well	11/15/21	2,686.50	47946	11/30/21
		0021.10.26.2	McNary Ind. Park	10/26/21	7,359.62	47829	11/12/21
		0028.10.22.2	golf course	10/22/21	2,193.56	47829	11/12/21
		0039.10.25.2	McFarland Well	10/25/21	1,832.97	47829	11/12/21
		0070.11.15.2	8th & F SE Corner	11/15/21	48.98	47946	11/30/21
		0104.10.26.2	Street Lights	10/26/21	2,657.84	47829	11/12/21
		0112.11.15.2	800 6th St.	11/15/21	58.44	47946	11/30/21
		0112.11.15.2	700 6th St.	11/15/21	239.94	47946	11/30/21
		0112.11.15.2	700 6th St.	11/15/21	239.94	47946	11/30/21
		0112.11.15.2	700 6th St.	11/15/21	239.94	47946	11/30/21
		0146.11.15.2	Bud Draper Dr.	11/15/21	4,177.81	47946	11/30/21
		0153.11.15.2	Water Booster Station	11/15/21	2,009.08	47946	11/30/21
		0161.11.15.2	Port Well	11/15/21	3,935.66	47946	11/30/21
		0179.10.26.2	285 Radar Rd.	10/26/21	492.96	47829	11/12/21
		0187.11.15.2	Div 7 Naches Ave. Lift	11/15/21	28.43	47946	11/30/21
		0443.11.10.2	Marina Lights	11/10/21	135.28	47892	11/18/21
		0500.11.15.2	129 Walla Walla St.	11/15/21	37.59	47946	11/30/21
Total 1684:					28,427.08		

Vendor Number	Name	Invoice Number	Description	Invoice Date	Invoice Amount	Check Number	Check Issue Date
1686							
1686	Pacific Power	8092560	Nugent Park Distribution	10/25/21	796.26	47828	11/12/21
		REQUEST#8	Power to Golf Sheds	10/08/21	1,516.90	47709	Multiple
		REQUEST#8	Power to Golf Sheds	10/08/21	1,516.90-		
		WO#806356	Power to Golf Sheds	08/16/21	3,996.00	47709	Multiple
		WO#806356	Power to Golf Sheds	08/16/21	3,996.00-		
		WO#810545	Power to Golf Sheds	10/08/21	1,516.90	47828	11/12/21
		WO6953363	Street Lighting Aggreement	11/15/21	1,443.00	47891	11/18/21
	Total 1686:				3,756.16		
1715							
1715	Pea Ridge Embroidery	37982	Marina Clothing for Salud	11/03/21	453.88	47831	11/12/21
		38005	Employee Jackets	11/09/21	6,049.50	47947	11/30/21
	Total 1715:				6,503.38		
1751							
1751	Photography Plus Inc.	11.22.2021	Downtown Revitalization Grant	11/22/21	15,373.07	47948	11/30/21
	Total 1751:				15,373.07		
1763							
1763	Platt	2E88813	Wire Connectors, Ballast	11/02/21	59.36	47949	11/30/21
		2E96887	Parks Supplies	11/03/21	51.94	47833	11/12/21
		2F30353	Street Lighting	11/09/21	1,078.76	47894	11/18/21
	Total 1763:				1,190.06		
1791							
1791	PRO RENTAL & SALES, INC.	1598641-000	City Hall Lights	09/21/21	58.24	47895	11/18/21
		1610329-000	Scissorlift for Halloween	11/08/21	522.00	47895	11/18/21
		1611586-000	Nugent Park Bathrooms	10/28/21	922.20	47895	11/18/21
		1611586-000	Nugent Park Bathrooms	11/11/21	650.00	47895	11/18/21
		1611589-000	Vehicle #22	10/20/21	73.75	47834	11/12/21
		1611589-000	Vehicle #22	10/20/21	73.75	47834	11/12/21
		1611589-000	Vehicle #22	10/20/21	73.75	47834	11/12/21
		1611589-000	Vehicle #22	10/20/21	73.75	47834	11/12/21
		1615467-000	Halloween Lights	11/01/21	812.00	47834	11/12/21
	Total 1791:				3,259.44		
1812							
1812	Purswell Pump	32769	Well & Pump Repair	10/29/21	20,752.00	47835	11/12/21
	Total 1812:				20,752.00		
1818							
1818	Quill Corporation	17522641-2	Golf Course Supplies	06/18/21	40.18	47836	11/12/21
		17522758-2	Office Supplies	06/18/21	96.17	47836	11/12/21
		17522758-2	Office Supplies	06/18/21	19.11	47836	11/12/21
		17522758-2	Office Supplies	06/18/21	38.53	47836	11/12/21

Vendor Number	Name	Invoice Number	Description	Invoice Date	Invoice Amount	Check Number	Check Issue Date
		17522758-2	Office Supplies	06/18/21	57.64	47836	11/12/21
		17522758-2	Office Supplies	06/18/21	57.64	47836	11/12/21
		17522758-2	Office Supplies	06/18/21	38.53	47836	11/12/21
		17522758-2	Office Supplies	06/18/21	5.63	47836	11/12/21
		17525082-2	Office Supplies	10/18/21	2.91	47836	11/12/21
		17525082-2	Office Supplies	10/18/21	.58	47836	11/12/21
		17525082-2	Office Supplies	10/18/21	1.17	47836	11/12/21
		17525082-2	Office Supplies	10/18/21	1.75	47836	11/12/21
		17525082-2	Office Supplies	10/18/21	1.75	47836	11/12/21
		17525082-2	Office Supplies	10/18/21	1.17	47836	11/12/21
		17525082-2	Office Supplies	10/18/21	.16	47836	11/12/21
		18745753	Office Supplies	08/11/21	31.75	47836	11/12/21
		18746211	Office Supplies	08/11/21	18.29	47836	11/12/21
		18746211	Office Supplies	08/11/21	3.63	47836	11/12/21
		18746211	Office Supplies	08/11/21	7.33	47836	11/12/21
		18746211	Office Supplies	08/11/21	10.96	47836	11/12/21
		18746211	Office Supplies	08/11/21	10.96	47836	11/12/21
		18746211	Office Supplies	08/11/21	7.33	47836	11/12/21
		18746211	Office Supplies	08/11/21	1.08	47836	11/12/21
		18895803	Office Supplies	08/19/21	10.43	47836	11/12/21
		18895803	Office Supplies	08/19/21	2.07	47836	11/12/21
		18895803	Office Supplies	08/19/21	4.18	47836	11/12/21
		18895803	Office Supplies	08/19/21	6.25	47836	11/12/21
		18895803	Office Supplies	08/19/21	6.25	47836	11/12/21
		18895803	Office Supplies	08/19/21	4.18	47836	11/12/21
		18895803	Office Supplies	08/19/21	.63	47836	11/12/21
		18917934	Marina Cleaning Supplies	08/19/21	237.81	47836	11/12/21
		18917957	Office Supplies	08/11/21	89.00	47836	11/12/21
		18917957	Office Supplies	08/11/21	17.68	47836	11/12/21
		18917957	Office Supplies	08/11/21	35.66	47836	11/12/21
		18917957	Office Supplies	08/11/21	53.34	47836	11/12/21
		18917957	Office Supplies	08/11/21	53.34	47836	11/12/21
		18917957	Office Supplies	08/11/21	35.66	47836	11/12/21
		18917957	Office Supplies	08/11/21	5.22	47836	11/12/21
		18918213	Office Supplies	08/19/21	62.00	47836	11/12/21
		18918213	Office Supplies	08/19/21	12.32	47836	11/12/21
		18918213	Office Supplies	08/19/21	24.84	47836	11/12/21
		18918213	Office Supplies	08/19/21	37.16	47836	11/12/21
		18918213	Office Supplies	08/19/21	37.16	47836	11/12/21
		18918213	Office Supplies	08/19/21	24.84	47836	11/12/21
		18918213	Office Supplies	08/19/21	3.64	47836	11/12/21
		18918668	Marina Cleaning Supplies	08/19/21	70.92	47836	11/12/21
		19324121	Office Supplies	09/07/21	44.50	47836	11/12/21
		19324121	Office Supplies	09/07/21	8.84	47836	11/12/21
		19324121	Office Supplies	09/07/21	17.83	47836	11/12/21
		19324121	Office Supplies	09/07/21	26.67	47836	11/12/21
		19324121	Office Supplies	09/07/21	26.67	47836	11/12/21
		19324121	Office Supplies	09/07/21	17.83	47836	11/12/21
		19324121	Office Supplies	09/07/21	2.61	47836	11/12/21
		19328321	Office Supplies	09/07/21	25.48	47836	11/12/21
		19328321	Office Supplies	09/07/21	5.06	47836	11/12/21
		19328321	Office Supplies	09/07/21	10.21	47836	11/12/21
		19328321	Office Supplies	09/07/21	15.27	47836	11/12/21

Vendor Number	Name	Invoice Number	Description	Invoice Date	Invoice Amount	Check Number	Check Issue Date
		19328321	Office Supplies	09/07/21	15.27	47836	11/12/21
		19328321	Office Supplies	09/07/21	10.21	47836	11/12/21
		19328321	Office Supplies	09/07/21	1.49	47836	11/12/21
		19675732	supplies for building dept.	09/20/21	12.59	47836	11/12/21
		19752903	Office Supplies	09/22/21	80.08	47836	11/12/21
		19752903	Office Supplies	09/22/21	15.91	47836	11/12/21
		19752903	Office Supplies	09/22/21	32.08	47836	11/12/21
		19752903	Office Supplies	09/22/21	47.99	47836	11/12/21
		19752903	Office Supplies	09/22/21	47.99	47836	11/12/21
		19752903	Office Supplies	09/22/21	32.08	47836	11/12/21
		19752903	Office Supplies	09/22/21	4.71	47836	11/12/21
		20498908	Office Supplies	10/25/21	20.26	47836	11/12/21
		20498908	Office Supplies	10/25/21	4.02	47836	11/12/21
		20498908	Office Supplies	10/25/21	8.12	47836	11/12/21
		20498908	Office Supplies	10/25/21	12.14	47836	11/12/21
		20498908	Office Supplies	10/25/21	12.14	47836	11/12/21
		20498908	Office Supplies	10/25/21	8.12	47836	11/12/21
		20498908	Office Supplies	10/25/21	1.18	47836	11/12/21
		20543976	Ceramic Heater-Building Dept.	10/27/21	87.98	47836	11/12/21
		20641644	Office Supplies	11/01/21	58.54	47896	11/18/21
		20641644	Office Supplies	11/01/21	11.63	47896	11/18/21
		20641644	Office Supplies	11/01/21	23.45	47896	11/18/21
		20641644	Office Supplies	11/01/21	35.09	47896	11/18/21
		20641644	Office Supplies	11/01/21	35.09	47896	11/18/21
		20641644	Office Supplies	11/01/21	23.45	47896	11/18/21
		20641644	Office Supplies	11/01/21	3.43	47896	11/18/21
		20664504	Office Supplies	11/01/21	20.70	47896	11/18/21
		20664504	Office Supplies	11/01/21	4.11	47896	11/18/21
		20664504	Office Supplies	11/01/21	8.29	47896	11/18/21
		20664504	Office Supplies	11/01/21	12.41	47896	11/18/21
		20664504	Office Supplies	11/01/21	12.41	47896	11/18/21
		20664504	Office Supplies	11/01/21	8.29	47896	11/18/21
		20664504	Office Supplies	11/01/21	1.22	47896	11/18/21
		20664542	Marina Office Supplies	11/01/21	581.10	47896	11/18/21
		20664803	Office Supplies	11/01/21	62.29	47896	11/18/21
		20664803	Office Supplies	11/01/21	12.38	47896	11/18/21
		20664803	Office Supplies	11/01/21	24.96	47896	11/18/21
		20664803	Office Supplies	11/01/21	37.33	47896	11/18/21
		20664803	Office Supplies	11/01/21	37.33	47896	11/18/21
		20664803	Office Supplies	11/01/21	24.96	47896	11/18/21
		20664803	Office Supplies	11/01/21	3.64	47896	11/18/21
		20705154	Marina Supplies	11/01/21	26.99	47896	11/18/21
		20733988	Office Supplies	11/03/21	9.79	47896	11/18/21
		20733988	Office Supplies	11/03/21	1.94	47896	11/18/21
		20733988	Office Supplies	11/03/21	3.92	47896	11/18/21
		20733988	Office Supplies	11/03/21	5.87	47896	11/18/21
		20733988	Office Supplies	11/03/21	5.87	47896	11/18/21
		20733988	Office Supplies	11/03/21	3.92	47896	11/18/21
		20733988	Office Supplies	11/03/21	.57	47896	11/18/21
		20738945	Building Dept-Printer Ink	11/01/21	1,172.26	47896	11/18/21
		20964095	Office Supplies	11/12/21	82.84	47950	11/30/21
		20964095	Office Supplies	11/12/21	16.46	47950	11/30/21

Vendor Number	Name	Invoice Number	Description	Invoice Date	Invoice Amount	Check Number	Check Issue Date
		20964095	Office Supplies	11/12/21	33.19	47950	11/30/21
		20964095	Office Supplies	11/12/21	49.65	47950	11/30/21
		20964095	Office Supplies	11/12/21	49.65	47950	11/30/21
		20964095	Office Supplies	11/12/21	33.19	47950	11/30/21
		20964095	Office Supplies	11/12/21	4.87	47950	11/30/21
		20999853	Marina Supplies	11/15/21	479.73	47950	11/30/21
		21004070	Marina Supplies	11/15/21	243.66	47950	11/30/21
		21041472	Marina Supplies	11/15/21	67.68	47950	11/30/21
		21042294	Marina Supplies	11/15/21	135.36	47950	11/30/21
		21167982	Office Supplies	11/22/21	5.52	47950	11/30/21
		21167982	Office Supplies	11/22/21	1.10	47950	11/30/21
		21167982	Office Supplies	11/22/21	2.21	47950	11/30/21
		21167982	Office Supplies	11/22/21	3.31	47950	11/30/21
		21167982	Office Supplies	11/22/21	3.31	47950	11/30/21
		21167982	Office Supplies	11/22/21	2.21	47950	11/30/21
		21167982	Office Supplies	11/22/21	.33	47950	11/30/21
		21170294	Office Supplies	11/22/21	3.07	47950	11/30/21
		21170294	Office Supplies	11/22/21	.61	47950	11/30/21
		21170294	Office Supplies	11/22/21	1.23	47950	11/30/21
		21170294	Office Supplies	11/22/21	1.84	47950	11/30/21
		21170294	Office Supplies	11/22/21	1.84	47950	11/30/21
		21170294	Office Supplies	11/22/21	1.23	47950	11/30/21
		21170294	Office Supplies	11/22/21	.17	47950	11/30/21
		21174188	Planner-Esmeralda	11/22/21	17.99	47950	11/30/21
		C17522641	Golf Course Supplies	09/30/21	63.98-	47836	11/12/21
	Total 1818:				5,395.66		
1846							
1846	RDO Equipment Co.	LATECHOCT	Account Fee"	10/31/21	2.90	47837	11/12/21
	Total 1846:				2.90		
1929							
1929	S.S. EQUIPMENT	IH44811	Golf Course Supplies	10/04/21	344.08	47897	11/18/21
		IH44812	Golf Course New Holland Parts	10/12/21	87.28	47839	11/12/21
	Total 1929:				431.36		
1944							
1944	Sanitary Disposal, Transfer St	731334	Nugent Park Bathroom Demo	10/21/21	73.79	47840	11/12/21
		731359	Nugent Park Bathroom Demo	10/21/21	121.61	47840	11/12/21
		731517	Nugent Park Demo	10/22/21	153.75	47840	11/12/21
		732000	Nugent Park Demo	10/26/21	117.49	47840	11/12/21
		732164	Nugent Park Demo	10/27/21	44.22	47840	11/12/21
	Total 1944:				510.86		
2059							
2059	Smitty's Ace Hardware	660017	Golf Course	10/11/21	160.50	47842	11/12/21

Vendor Number	Name	Invoice Number	Description	Invoice Date	Invoice Amount	Check Number	Check Issue Date
		660471	marina Supplies	10/19/21	25.97	47842	11/12/21
		660496	Golf Course	10/19/21	76.01	47842	11/12/21
		660612	Golf Course	10/21/21	34.71	47842	11/12/21
		660783	Halloween Supplies	10/25/21	73.89	47842	11/12/21
		660915	marina Supplies	10/27/21	20.97	47842	11/12/21
		661034	Water Dept. Supplies	10/29/21	11.02	47842	11/12/21
		661292	Golf Course	11/03/21	105.87	47842	11/12/21
		661528	Golf Course	11/08/21	110.90	47898	11/18/21
		661952	Park Supplies	11/16/21	10.47	47898	11/18/21
		662200	Park Supplies	11/19/21	76.91	47952	11/30/21
		662228	Golf Course	11/19/21	23.16	47952	11/30/21
		662367	Parks supplies	11/22/21	316.86	47952	11/30/21
		662407	Police Dept Supplies	11/23/21	31.98	47952	11/30/21
		662426	Water Dept. Supplies	11/23/21	64.19	47952	11/30/21
		662480	Streets Supplies	11/24/21	52.68	47952	11/30/21
	Total 2059:				1,196.09		
2067							
2067	SOTELO, SUSANA	11122021	reimbursement for art event supplies	11/11/21	77.65	47900	11/18/21
		11222021	In-Service lunch Reimbursment	11/22/21	45.00	47953	11/30/21
		HALLOWEE	Halloween Programming-Reimbursement	11/01/21	114.04	47843	11/12/21
	Total 2067:				236.69		
2076							
2076	Specks Printing	8648	Self Sealing Planning Dept. Envelopes	11/05/21	325.00	47844	11/12/21
		8656	Budget Booklets	11/09/21	1,300.00	47844	11/12/21
	Total 2076:				1,625.00		
2138							
2138	SYNCHRONY BANK/AMAZON	3142.11.01.2	Library programming-fees	11/01/21	52.08	47845	11/12/21
		3142.11.15.2	Fees/dues library	11/15/21	4.90	47955	11/30/21
		4463534946	supplies	11/05/21	28.81	47955	11/30/21
		4578893534	Program Supplies	11/02/21	35.97	47955	11/30/21
		5778776349	Program Supplies	10/13/21	35.11	47845	11/12/21
		8677835789	Program Supplies	10/05/21	81.63	47845	11/12/21
	Total 2138:				238.50		
2145							
2145	Tailored Solutions Corp.	20211110	FORSE/Com Millennium Workstations & annual maint.	11/02/21	60.00	47902	11/18/21
	Total 2145:				60.00		
2148							
2148	Talos Engineering, Inc.	1828	Project Billing-Telemetry				

Vendor Number	Name	Invoice Number	Description	Invoice Date	Invoice Amount	Check Number	Check Issue Date
			and SCADA Upgrade	09/01/21	9,803.40	47847	11/12/21
		1828	Project Billing-Telemetry and SCADA Upgrade	09/01/21	9,803.41	47847	11/12/21
		1873	Water Department	11/24/21	1,922.10	47956	11/30/21
Total 2148:					21,528.91		
2214							
2214	Tom Denchel Ford Country	FOCS33753	Auto Repairs	08/23/21	53.19	47958	11/30/21
		FOCS33753	Auto Repairs	08/23/21	53.19	47958	11/30/21
		FOCS33753	Auto Repairs	08/23/21	53.19	47958	11/30/21
		FOCS33753	Auto Repairs	08/23/21	53.20	47958	11/30/21
Total 2214:					212.77		
2217							
2217	Tonkon Torp, LLP	1635771	Legal Services	11/18/21	282.49	47959	11/30/21
		1635772	Legal Services	11/18/21	20,566.50	47959	11/30/21
		1635773	Legal Services	11/18/21	6,310.82	47959	11/30/21
Total 2217:					27,159.81		
2227							
2227	Traffic Safety Supply Co.	INV041713	Street Signs	09/01/21	5,113.42	47903	11/18/21
		INV043270	Signage	10/20/21	150.24	47848	11/12/21
		INV043614	Street Supplies	10/29/21	1,565.57	47848	11/12/21
Total 2227:					6,829.23		
2264							
2264	Umatilla Chamber of Commerce	3RD QTR 20	TRT Grant	11/01/21	11,407.47	47850	11/12/21
		3RD QTR 20	TRT Grant	11/01/21	5,250.00	47850	11/12/21
		TRICKOTRE	Advertising for the Trick o Treat on Main	11/29/21	375.00	47960	11/30/21
Total 2264:					17,032.47		
2270							
2270	Umatilla County Circuit Court	212306	Jeremiah Garcia Paid Wrong Court	11/01/21	25.00	47851	Multiple
		212306	Jeremiah Garcia Paid Wrong Court	11/01/21	25.00-		
		212338	Paid Wrong Court-Mohan Ahuja	11/01/21	265.00	47860	11/16/21
Total 2270:					265.00		
2273							
2273	Umatilla County Finance Dept	OCTOBER20	County Assessment	10/01/21	2,615.15	47852	11/12/21
		Q1FY22DISP	Dispatch Services City of Umatilla -FY@@ 1st QTR	07/01/21	30,970.00	47961	11/30/21
		Q2FY22DISP	Dispatch Services-RY22 2nd QTR	10/01/21	30,970.00	47961	11/30/21

Vendor Number	Name	Invoice Number	Description	Invoice Date	Invoice Amount	Check Number	Check Issue Date
Total 2273:					64,555.15		
2274							
2274	Umatilla County Health Dept	1220	Annual Validation Fee Marina	11/10/21	137.00	47962	11/30/21
Total 2274:					137.00		
2281							
2281	Umatilla Elect. Coop. Assoc.	0004.11.01.2	Lights for Waterfall	11/01/21	35.00	47904	11/18/21
		6190.11.01.2	60 HP Pump	11/01/21	88.91	47904	11/18/21
		6190.11.01.2	Beach Access	11/01/21	70.00	47904	11/18/21
		7216.11.01.2	5 HP Sewer Pump	11/01/21	42.12	47904	11/18/21
		7216.11.01.2	Street Lights	11/01/21	27.00	47904	11/18/21
		7216.11.01.2	Industrial Discharge Facility	11/01/21	74.64	47904	11/18/21
Total 2281:					337.67		
2293							
2293	Unifirst Corporation	1430307752	Bldg Maint/Supplies CH/Library	10/08/21	19.89	47854	11/12/21
		1430307752	Bldg Maint/Supplies CH/Library	10/08/21	30.81	47854	11/12/21
		1430307752	Bldg Maint/Supplies CH/Library	10/08/21	30.80	47854	11/12/21
		1430309283	Big River Mats	10/26/21	31.75	47854	11/12/21
		1430309555	Bldg Maint/Supplies CH/Library	10/29/21	10.44	47854	11/12/21
		1430309555	Bldg Maint/Supplies CH/Library	10/29/21	16.17	47854	11/12/21
		1430309555	Bldg Maint/Supplies CH/Library	10/29/21	16.18	47854	11/12/21
		1430309878	Waste Water Supplies	11/02/21	40.69	47854	11/12/21
		1430309879	Shop Supplies and Mats	11/02/21	29.00	47854	11/12/21
		1430309880	Marina Mop Heads	11/02/21	28.50	47854	11/12/21
		1430309881	Big River Mats	11/02/21	31.75	47854	11/12/21
		1430309882	Police Mats	11/02/21	30.00	47854	11/12/21
		1430310166	Bldg Maint/Supplies CH/Library	11/05/21	67.17	47854	11/12/21
		1430310166	Bldg Maint/Supplies CH/Library	11/05/21	104.06	47854	11/12/21
		1430310166	Bldg Maint/Supplies CH/Library	11/05/21	104.06	47854	11/12/21
		1430310483	Waste Water Supplies	11/09/21	51.33	47964	11/30/21
		1430310484	Shop Supplies and Mats	11/09/21	33.37	47964	11/30/21
		1430310485	Marina Mop Heads	11/09/21	28.50	47964	11/30/21
		1430310486	Big River Mats	11/09/21	17.68	47906	11/18/21
		1430310487	Police Mats	11/09/21	30.00	47906	11/18/21
		1430311091	Waste Water Supplies	11/16/21	56.74	47964	11/30/21
		1430311092	Shop Supplies and Mats	11/16/21	55.58	47964	11/30/21
		1430311093	Marina Mop Heads	11/16/21	28.50	47964	11/30/21
		1430311094	Golf Course	11/16/21	31.75	47906	11/18/21

Vendor Number	Name	Invoice Number	Description	Invoice Date	Invoice Amount	Check Number	Check Issue Date
		1430311095	Police Mats	11/16/21	30.00	47906	11/18/21
		1430312010	Bldg Maint/Supplies CH/Library	11/26/21	10.44	47964	11/30/21
		1430312010	Bldg Maint/Supplies CH/Library	11/26/21	16.17	47964	11/30/21
		1430312010	Bldg Maint/Supplies CH/Library	11/26/21	16.18	47964	11/30/21
	Total 2293:				997.51		
2307							
2307	UPS	0000084WV8	PD Postage	10/23/21	19.29	47855	11/12/21
		84WV8451	Police Postage	11/06/21	36.52	47907	11/18/21
	Total 2307:				55.81		
2314							
2314	USA Bluebook Inc.	7741080	WWTP Lab Supplies	10/28/21	374.40	47856	11/12/21
	Total 2314:				374.40		
2337							
2337	Verizon Wireless	9891940709	Cell Phone Administrator	11/01/21	311.98	47908	11/18/21
		9891940709	Public Works Phones	11/01/21	104.25	47908	11/18/21
		9891940709	Public Works Phones	11/01/21	104.25	47908	11/18/21
		9891940709	Public Works Phones	11/01/21	104.25	47908	11/18/21
		9891940709	Public Works Phones	11/01/21	1,149.03	47908	11/18/21
		9891940709	Building Inspector Phone	11/01/21	41.91	47908	11/18/21
	Total 2337:				1,815.67		
2504							
2504	Mount's Lock & Key	252145	Marina Bathroom Locks	10/27/21	417.50	47821	11/12/21
	Total 2504:				417.50		
2505							
2505	Friends & Neighbors Services	1490	Marina parking lot	11/16/21	301.00	47924	11/30/21
	Total 2505:				301.00		
2530							
2530	Gold Badger Upfitter	COUPD1115	Outfit New Durango	11/15/21	3,065.77	47925	11/30/21
	Total 2530:				3,065.77		
2557							
2557	Hermiston Ranch & Home	2110-809799	Halloween	10/13/21	50.18	47809	11/12/21
		2110-824462	Clothing Allowance-Coleman	10/21/21	73.24	47809	11/12/21
		2110-824462	Clothing Allowance-Coleman	10/21/21	73.24	47809	11/12/21
		2110-824462	Clothing Allowance-Coleman	10/21/21	73.24	47809	11/12/21

Vendor Number	Name	Invoice Number	Description	Invoice Date	Invoice Amount	Check Number	Check Issue Date
		2110-824462	Clothing Allowance-Coleman	10/21/21	73.24	47809	11/12/21
		2110-829299	Clothing Allowance-Bighill	10/23/21	109.99	47809	11/12/21
		2110-829299	Clothing Allowance-Bighill	10/23/21	110.00	47809	11/12/21
		2111-871002	Clothing Allowance-Olsen	11/17/21	337.93	47929	11/30/21
		2111-871011	Clothing Allowance-N. Rodriguez	11/17/21	348.98	47929	11/30/21
	Total 2557:				1,250.04		
2612							
2612	Hermiston Transportation	5047	Senior/Diabled Tax Ticket	11/18/21	459.00	47930	11/30/21
	Total 2612:				459.00		
2695							
2695	Umpqua Research Company	M063747	Sludge Analysis	10/28/21	390.00	47905	11/18/21
		T005491	Lab Testing-Coliforms	10/26/21	225.00	47853	11/12/21
		T005615	Coliforms	11/18/21	250.00	47963	11/30/21
	Total 2695:				865.00		
2698							
2698	Skillman, Katie	EMPLOYEEI	Employee ID Card Photos	11/29/21	100.00	47951	11/30/21
	Total 2698:				100.00		
2720							
2720	Petroleum Compliance Services	2305	Training for pumping fuel at the marina	10/25/21	2,125.00	47832	11/12/21
	Total 2720:				2,125.00		
2723							
2723	T Mobile	8369.11.01.2	Library hotspots	11/01/21	187.56	47846	11/12/21
	Total 2723:				187.56		
2752							
2752	Pape Machinery	KM273634S	Equipment Purchase	10/28/21	21,376.75	47830	11/12/21
		KM273634S	Equipment Purchase	10/28/21	21,376.75	47830	11/12/21
		KM273634S	Equipment Purchase	10/28/21	21,373.75	47830	11/12/21
		KM273634S	Equipment Purchase	10/28/21	21,375.75	47830	11/12/21
		KM273644S	Equipment Purchase	10/28/21	4,942.40	47830	11/12/21
	Total 2752:				90,445.40		
2779							
2779	J Lugo's Construction, LLC	146	Reroof Metal Gazebo	11/16/21	5,850.00	47934	11/30/21
		147	Reroof Umatilla RV Park Bathroom	11/16/21	3,850.00	47934	11/30/21

Vendor Number	Name	Invoice Number	Description	Invoice Date	Invoice Amount	Check Number	Check Issue Date
Total 2779:					9,700.00		
2836							
2836	CXT Incorporated	90035963	Nugent Park Restroom	11/15/21	152,855.00	47872	11/18/21
Total 2836:					152,855.00		
2852							
2852	City of Umatilla	1002.11.01.2	Boyds Place	11/01/21	61.74	47792	11/12/21
		6002.11.01.2	Extra Refuse Marina	11/01/21	803.36	47792	11/12/21
		8092.11.1.20	Golf Course Refuse	11/01/21	161.70	47792	11/12/21
Total 2852:					1,026.80		
2923							
2923	Deere & Company	117196245	Terrain Cut Commerical Front Mower	10/21/21	21,467.82	47797	11/12/21
Total 2923:					21,467.82		
2924							
2924	Blackstone Publishing	INV2002391	audio books	10/18/21	76.82	47913	11/30/21
		INV2003659	audio books	10/21/21	26.94	47913	11/30/21
		INV2004900	audio books	10/27/21	26.95	47913	11/30/21
		INV2005856	audio books	10/31/21	53.85	47913	11/30/21
		INV2006733	audio books	11/04/21	7.95	47913	11/30/21
		INV2009506	audio books	11/18/21	61.08	47913	11/30/21
Total 2924:					253.59		
2960							
2960	Pendleton Bottling Co.	1089193	Retail for Golf Course Credit	11/05/21	63.35	47893	11/18/21
Total 2960:					63.35		
2981							
2981	Doug's Septic Service Inc.	22760	Portable Toilet-Golf Course	10/31/21	300.00	47874	11/18/21
Total 2981:					300.00		
3022							
3022	Nakonechny, Lyle	11242021	Archaeological Monitoring-Umatilla Trail Project	11/24/21	2,590.00	47941	11/30/21
Total 3022:					2,590.00		
3024							
3024	Hodgen Distributing	242973	Retail Product for Golf Course	11/02/21	89.88	47810	11/12/21

Vendor Number	Name	Invoice Number	Description	Invoice Date	Invoice Amount	Check Number	Check Issue Date
Total 3024:					89.88		
3038							
3038	Taylor Made Golf Company Inc.	35115635	Merchandise for Pro Shop	06/14/21	160.20	47957	11/30/21
		35136450	Merchandise for Pro Shop	06/19/21	218.40	47957	11/30/21
Total 3038:					378.60		
3043							
3043	DirectTV	039513239X	TV for Golf Course	11/15/21	111.98	47920	11/30/21
Total 3043:					111.98		
3058							
3058	Wilson, Gene	UNIFORMAL	Uniform Reimbursement	11/01/21	59.34	47857	11/12/21
Total 3058:					59.34		
3073							
3073	Mejia Ortega, Hazael	WWTPCERT	Reciprocity Waste Water Certification-Oregon	10/26/21	220.00	47820	11/12/21
Total 3073:					220.00		
3079							
3079	Walchli, Jamie	1	Firewood for Marina/RV Park	11/15/21	500.00	47910	11/18/21
Total 3079:					500.00		
3146							
3146	Columbia Basin Bait	899516	Bait for marina resale	10/29/21	182.70	47793	11/12/21
Total 3146:					182.70		
3165							
3165	Lithia Chrysler Dodge Jeep Ram	667424	Dodge Charger Repair	11/09/21	622.44	47885	11/18/21
Total 3165:					622.44		
3168							
3168	MB Exclusives Corp.	11.22.2021	Down Town Revitalization Grant	11/22/21	7,774.03	47940	11/30/21
Total 3168:					7,774.03		
3188							
3188	Myers, Roger	11.04.21	RV Hosts	11/04/21	106.67	47779	11/04/21
Total 3188:					106.67		

Vendor Number	Name	Invoice Number	Description	Invoice Date	Invoice Amount	Check Number	Check Issue Date
3190							
3190	Cinder Butte Rock Products	1388	Sand for roads	10/07/21	3,789.74	47791	11/12/21
		1420	Sand for roads	10/31/21	152.00	47791	11/12/21
	Total 3190:				3,941.74		
3191							
3191	Bechlel, Ames	SLIPRELEA	Slip Release H-19	10/21/21	130.00	47782	11/12/21
	Total 3191:				130.00		
3192							
3192	Magoteaux, Jim	SLIPRELEA	sliprelease2021	11/01/21	110.00	47819	11/12/21
	Total 3192:				110.00		
3193							
3193	Johnson, Kimberly	212036JOHN	Overpayment Kimberly Johnson	11/01/21	215.00	47815	11/12/21
	Total 3193:				215.00		
3194							
3194	Yucel, Adem	212279YUC	Overpayment	11/01/21	215.00	47858	11/12/21
	Total 3194:				215.00		
3195							
3195	Landeros Proa JR, Crespin	210067LAND	Overpayment Crespin Landeros Proa Jr.	11/01/21	10.00	47780	11/12/21
	Total 3195:				10.00		
3196							
3196	Zues LLC	212329SANT	Overpayment Victor Santiago Rolo	11/01/21	215.00	47859	11/12/21
	Total 3196:				215.00		
3197							
3197	Singh, Sharandeep	211871SING	Overpayment Sharandeep Sighn	11/01/21	38.00	47841	11/12/21
	Total 3197:				38.00		
3198							
3198	Gesegnet, Daniel E.	212166GES	Overpayment Daniel Gesegnet	11/01/21	215.00	47803	11/12/21
	Total 3198:				215.00		
3199							
3199	Rivas, Javier	212203RIVA	Overpayment Javier Rivas	11/01/21	38.00	47838	11/12/21

Vendor Number	Name	Invoice Number	Description	Invoice Date	Invoice Amount	Check Number	Check Issue Date
Total 3199:					38.00		
3200							
3200	Bratlie, Michelle	1973	Flagger Training	11/02/21	1,455.44	47784	11/12/21
Total 3200:					1,455.44		
3201							
3201	TRE Environmental Strategies, L	3395	IWW Algea Tests	11/04/21	850.00	47849	11/12/21
Total 3201:					850.00		
3202							
3202	Holthus, Jay	REFUND11.0	Refund for Cart Shed Discount	11/09/21	30.00	47811	11/12/21
Total 3202:					30.00		
3203							
3203	Springstead, Jon	E19-2021	slip release for E19	11/07/21	75.00	47901	11/18/21
Total 3203:					75.00		
3204							
3204	VIP Production Northwest, INC.	38685	Deposit for Portable Sound System	11/16/21	3,634.47	47909	11/18/21
Total 3204:					3,634.47		
3205							
3205	Curfman Steel Corporation	20749	siding for golf cart sheds	10/22/21	1,030.29	47871	11/18/21
Total 3205:					1,030.29		
3206							
3206	Smoltz, Jim	160211023-0	RV Cancellation	11/16/21	66.86	47899	11/18/21
		160211023-0	RV Cancellation	11/16/21	5.34	47899	11/18/21
Total 3206:					72.20		
3207							
3207	Interactive Science, Inc.	2021-10989-	Wowbrary Sponsorship	11/20/21	177.53	47932	11/30/21
Total 3207:					177.53		
3208							
3208	Neville, Kurt	SLIPRELEA	slip release E15	11/22/21	75.00	47943	11/30/21
Total 3208:					75.00		
3209							
3209	Srixon/Cleveland Golf/XXIO	6668749SO	Retail Product for Big River	11/05/21	240.50	47954	11/30/21

Vendor Number	Name	Invoice Number	Description	Invoice Date	Invoice Amount	Check Number	Check Issue Date
Total 3209:					240.50		
3210							
3210	Equine Elegance	12042021	Wagon Rides-Winter Festival	12/04/21	500.00	47922	11/30/21
Total 3210:					500.00		
Grand Totals:					832,715.49		

Report Criteria:
Detail report type printed

CITY OF UMATILLA, OREGON

AGENDA BILL

Agenda Title:	**Meeting Date:**
ODOT Quarry Plan Amendment (PA-2-21) - The applicant, Oregon Department of Transportation, is requesting to have their site located in the UGB be added to the City of Umatilla Comprehensive plan Goal 5 so their resource will be protected to allow mining, processing, and stockpiling.	2021-12-07

Department:	**Director:**	**Contact Person:**	**Phone Number:**
Community Development	Brandon Seitz	Jacob Foutz	

Cost of Proposal:	**Fund(s) Name and Number(s):**
NA **Amount Budgeted:** NA	N/A

Reviewed by Finance Department:	**Previously Presented:**
No	NA

Attachments to Agenda Packet Item:

PA-2-21 ODOT Quarry Findings -CC.docx

Assessor's Map 5N 28 16A.pdf

PA-2-21 Notice Map.pdf

Text Ammendment-Updated.docx

Summary Statement:

The Planning Commission unanimously voted to recommend approval of PA-2-21 to the City Council at their November 23rd commission meeting. A sample motion is provided below, if approved staff will bring the adopting ordinance for consideration to the January 4, 2022 Council meeting.

I move to approve ODOT Plan Amendment PA-2-21 and adopt the Planning Commissions findings.

Consistent with Council Goals:
N/A

CITY OF UMATILLA PLANNING COMMISSION
REPORT AND RECCOMENDATION
FOR CITY COUNCIL FOR
PLAN AMENDMENT PA-2-21

DATE OF HEARING: November 23, 2021

REPORT PREPARED BY: Jacob Foutz, Senior Planner

I. GENERAL INFORMATION AND FACTS

Applicant:	Oregon Department of Transportation/Teresa Penninger 3012 Island Avenue La Grande, OR 97850
Property Owner:	Oregon Department of Transportation 3012 Island Avenue La Grande, OR 97850
Land Use Review:	Comprehensive Plan Goal 5 Amendment (Type IV review).
Subject Property Description:	Township 5N, Range 28, Section 16A, Tax Lot 1700.
Location:	The property is located in the along Highway 730 near Power city and Margaret.
Existing Development:	Rock pit for mining.
Existing Zoning:	General Rural (F-2) Zone.

II. Nature of Request/Applicable Comprehensive Plan and Zoning Ordinance Provisions

The applicant, Oregon Department of Transportation, is requesting to have their site located in the UGB be added to the City of Umatilla Comprehensive plan Goal 5 so their resource will be protected to allow mining, processing, and stockpiling.

The City of Umatilla does not have unique specific decision criteria for Goal 5 exceptions. The

applicable decision criteria from the State of Oregon OARs will be used and is listed below:

- OAR Chapter 660 LCDC Division 23 Procedures and Requirements for Complying with Goal 5. 660-023-0180 Mineral and Aggregate Resources, 660-023-0040 ESEE Decision Process and 660-023-0050 Programs to Achieve Goal 5.

Applicants Narrative:

Intended Outcomes of Application Process:
The request is to add Tax Lot 1700 of Assessor's Map 5N 28 16A to the City of Umatilla list of significant aggregate sites, providing necessary protections under statewide Planning Goal 5 and Oregon Administrative Rule (OAR) Chapter 660 Department of Land Conservation and Development (DLCD) Division 23 Procedures and Requirements for Complying with Goal 5 including limiting conflicting uses within the buffer area, and to allow mining, processing, and stockpiling at the site.

The site is currently listed in the Umatilla County Technical Report on page D-174 as a 1A Site which indicates that at the time of listing the site was determined to be not important. This application will provide evidence that the site is significant and is in an area with other aggregate extraction that supports county roads and local development. The subject property is identified in the City of Umatilla Comprehensive Plan as Natural Resource which recognizes areas that contain high-quality aggregate and basalt.

The Oregon Department of Transportation (ODOT) intends to excavate, process and batch aggregate for public road projects, and to stockpile aggregate material for current and future use.

Location and Current Use of the Property:
The subject property is along Highway 730, just to the east of Interstate 82, within the Urban Growth Boundary of the City of Umatilla. There are two points along Highway 730 which allow access to the site as well as Power City Road. There has been historic aggregate use of the subject property since its acquisition by ODOT in 1951. Current use of the property is aggregate extraction and stockpile. There have been historical permits issued by Umatilla County to allow mining, crushing, and processing. There are also transmission lines installed on and adjacent to the subject property.

Surrounding Uses:
The area around the property is predominately infrastructure with Highway 730 to the north and Interstate 82 to the west. McNary Dam is within sight to the northeast and the associated substation and transmission line infrastructure is to the north. There are transmission lines on and immediately adjacent to the subject property. There are commercial activities in the vicinity including storage facilities, a healthcare clinic, and a labor contractor. Highway 730 to the west becomes the commercial core for the City of Umatilla beyond the ODOT weigh station that is to the northwest. There are residential uses also to the northwest and to the east and southeast. There is a home within the impact area on the east side of Lind Road and a residential unit as

part of one of the previously mentioned storage facilities. There are two aggregate sites to the west of the property: one owned by Umatilla County and the other in private ownership.

Required Review:

- OAR Chapter 660 LCDC Division 23 Procedures and Requirements for Complying with Goal 5 is applicable. These rules provide the procedures and criteria for inventorying and evaluating Goal 5 resources and for developing land use programs to conserve and protect significant Goal 5 resources. This application will specifically review 660-023-0180 Mineral and Aggregate Resources, 660-023-0040 ESEE Decision Process and 660-023-0050 Programs to Achieve Goal 5.
- Applicable Goals and Policies from the City of Umatilla and Umatilla County Comprehensive Plans are incorporated and evaluated.
- Included are the requirements of the Joint Management Agreement between the City of Umatilla and Umatilla County, which determine how the two jurisdictions coordinate land use activities.
- This application provides a review of Statewide Land Use Goals 1 through 14. Goals 15 through 19 are not applicable.

III. Analysis

The criteria applicable to this request are shown in underlined text and the responses are shown in standard text. All of the following criteria must be satisfied in order for this request to be approved.

STANDARDS OF THE OREGON ADMINISTRATIVE RULES, DIVISION 23 FOR GOAL 5 LARGE SIGNIFICANT SITES are found in OAR 660-023-0180 (3), (5), & (7), OAR 660-023-0040, and OAR 660-023-0050.

OAR 660-023-0180 Mineral and Aggregate Resources

(3) An aggregate resource site shall be considered significant if adequate information regarding the quantity, quality, and location of the resource demonstrates that the site meets any one of the criteria in subsections (a) through (c) of this section, except as provided in subsection (d) of this section:

(a) A representative set of samples of aggregate material in the deposit on the site meets Oregon Department of Transportation (ODOT) specifications for base rock for air degradation, abrasion, and sodium sulfate soundness, and the estimated amount of material is more than 2,000,000 tons in the Willamette Valley, 500,000 tons outside the Willamette Valley;

(b) The material meets local government standards establishing a lower threshold for significance than subsection (a) of this section; or

(c) The aggregate site is on an inventory of significant aggregate sites in an acknowledged plan on the applicable date of this rule.

(d) Notwithstanding subsections (a) through (c) of this section, except for an expansion area of an existing site if the operator of the existing site on March 1, 1996 had an enforceable property interest in the expansion area on that date, an aggregate site is not significant if the

criteria in either paragraphs (A) or (B) of this subsection apply:

(A) More than 35 percent of the proposed mining area consists of soil classified as Class I on Natural Resource and Conservation Service (NRCS) maps on the date of this rule; or

(B) More than 35 percent of the proposed mining area consists of soil classified as Class II, or of a combination of Class II and Class I or Unique soil on NRCS maps available on the date of this rule, unless the average width of the aggregate layer within the mining area exceeds:

(i) 60 feet in Washington, Multnomah, Marion, Columbia, and Lane counties;

(ii) 25 feet in Polk, Yamhill, and Clackamas counties; or

(iii) 17 feet in Linn and Benton counties.

Applicants Findings: The Powerline Quarry is in eastern Oregon and has an inventory of 2.95 million tons of available sands and gravels and basalt bedrock. The sand and gravel layer are up to 68 feet deep with the basalt layers between 183 and 290 feet. An evaluation of the sands and gravels to account for rock that may not be of the right size or meet other standards the inventory of half the total available is 365,000 cubic yards or 548,400 tons. For the basalt there is 1.6 million cubic yards or 2.4 million tons.

Historic DOGAMI mapping and the United States Department of Agriculture Soil Conservations Service Soil Survey identify, respectively, lava flows of Quaternary Missoula Flood deposits of silt to boulders over Miocene Columbia River Basalt Group and identify the site as predominately Pits Gravel, a designation that is applied to areas where aggregate extraction has taken place or is anticipated at the time of the soil survey.

Samples of material were tested from the Powerline Quarry in 1980, 1992, and 1993. For this analysis we are relying on testing completed in 1992, specifically test number 92-14527. View the three pages of the lab report as though it were a spreadsheet and read across each of the pages staying within the same row of cells. The requirements are for abrasion to be less than or equal to 30 percent, soundness to be less than or equal to 12 percent, and less than or equal to both 30 percent and 4 inches for degradation. For this testing the abrasion is 12.6 percent, soundness is 1 percent, and degradation is 11.4 percent with a sediment height of .2 inches.

Powerline Quarry exceeds the criteria for a significant aggregate site in accordance with OAR 660-023-0180(3)(a).

Staff's Conclusion: In review of the material provided by the applicant staff have found that proposed site meets the requirements found above. 548,400 tons of sand and gravel as well as 2.4 million tons of basalt rock clearly exceed the requirement of 500,000 tons for protection outside of the Willamette valley as required by criterion 3(a).

(5) For significant mineral and aggregate sites, local governments shall decide whether mining is permitted. For a PAPA application involving an aggregate site determined to be significant under section (3) of this rule, the process for this decision is set out in subsections (a) through (g) of this section. A local government must complete the process within 180 days after receipt of a complete application that is consistent with section (8) of this rule, or by the earliest date after 180 days allowed by local charter.

(a) The local government shall determine an impact area for the purpose of identifying

conflicts with proposed mining and processing activities. The impact area shall be large enough to include uses listed in subsection (b) of this section and shall be limited to 1,500 feet from the boundaries of the mining area, except where factual information indicates significant potential conflicts beyond this distance. For a proposed expansion of an existing aggregate site, the impact area shall be measured from the perimeter of the proposed expansion area rather than the boundaries of the existing aggregate site and shall not include the existing aggregate site.

Applicants Findings: This request is for Goal 5 protections for the entire ODOT aggregate site and is not a request for an expansion. Utilizing an impact area of 1500-feet from the boundary of the mining area is reasonable and does account for the activities in the vicinity.

Staff's Conclusion: Mining is permitted at the existing site, this process will allow for the protection of aforementioned use. The applicants proposed impact area of 1500-feet will be sufficient to account for the activities in the area.

(b) The local government shall determine existing or approved land uses within the impact area that will be adversely affected by proposed mining operations and shall specify the predicted conflicts. For purposes of this section, "approved land uses" are dwellings allowed by a residential zone on existing platted lots and other uses for which conditional or final approvals have been granted by the local government. For determination of conflicts from proposed mining of a significant aggregate site, the local government shall limit its consideration to the following:

Applicants Findings: There is a variety of activity within the 1,500-foot impact area based on review of aerial photography and site visits. Residential areas are found to the northwest of the site as well as to the east and southeast, however only two residential units to the east fall within the impact area. The one on tax lot 100 of Assessor's Map 5N28E16AC is associated with a self-storage operation which is a commercial activity which was converted from a farm use (hatchery and coop) in 1991. Also, within the impact area are two self-storage operations and a medical facility, both along Highway 730. And Highway 730 and Interstate 82, including the interchange, are within the 1500-foot impact area. These uses appear to have been "approved land uses" granted by either Umatilla County or the City of Umatilla.

Staff's Conclusion: The subject property currently is zoned General rural in the Urban Growth Boundary. The subject property has existed prior to application for a goal 5 protection, the current use will not change and existing uses in the area have been exposed to the use prior to this application.

(A) Conflicts due to noise, dust, or other discharges with regard to those existing and approved uses and associated activities (e. g. , houses and schools) that are sensitive to such discharges;

Applicants Findings: There are uses that could be impacted by noise, dust, or other discharges from the proposed mining operation. Noise from mining activities will be mitigated as the aggregate site, based on past use, is already functionally below ground level containing and muffling most noise. Blasting, which is conducted as part of the mining process, can also create noise, cause vibration, and result in fly rock. The current and continued configuration of the mining site will mitigate noise and fly rock. This same configuration of the mining site will also allow ODOT to manage stormwater and other related discharges onsite. Should any activities

require permitting by the Oregon Department of Environmental Quality those permits will be obtained. Additionally, ODOT will comply with the requirements of DOGAMI.
Staff's Conclusion: This is not a new use, the existing site has mitigated conflicts through time with noise, dust or other charges due to the preexisting use. No changes are proposed to the site at this time, the request is to have the existing use and site be protected under goal 5 provisions.

> (B) Potential conflicts to local roads used for access and egress to the mining site within one mile of the entrance to the mining site unless a greater distance is necessary in order to include the intersection with the nearest arterial identified in the local transportation plan. Conflicts shall be determined based on clear and objective standards regarding sight distances, road capacity, cross section elements, horizontal and vertical alignment, and similar items in the transportation plan and implementing ordinances. Such standards for trucks associated with the mining operation shall be equivalent to standards for other trucks of equivalent size, weight, and capacity that haul other materials;

Applicants Findings: Unlike commercial quarry sites, this quarry will be used to support public road projects, with traffic generation temporary and sporadic. Occasional maintenance by the state will also be customary generally consisting of just a few vehicles. Most vehicle trips in and out of the quarry will occur when material from the quarry is used for road maintenance and improvement projects. These projects generally occur from the spring through fall during daylight hours. The level of vehicle trips generated by the quarry does not trigger a traffic impact analysis as it will be less than the 250 average daily trips as outlined at the City of Umatilla Zoning Ordinance 10-11-10.
Staff's Conclusion: The subject property has access to multiple roads in the area. The subject property is not expected to create any conflicts for access and egress. Power City Rd and Margaret St both have access to Highway 730 a major highway. It is worth noting that the applicant is ODOT and as such has a maintenance responsibility for Highway 730.

> (C) Safety conflicts with existing public airports due to bird attractants, i.e., open water impoundments as specified under OAR chapter 660, division 013;

Applicants Findings: There are no public airports within the Impact Area. The closest public airport is south of Hermiston.
Staff's Conclusion: This Criterion does not apply.

> (D) Conflicts with other Goal 5 resource sites within the impact area that are shown on an acknowledged list of significant resources and for which the requirements of Goal 5 have been completed at the time the PAPA is initiated;

Applicants Findings: There are no county inventoried Goal 5 resource sites within the impact area for Powerline Quarry. The City of Umatilla Comprehensive Plan map designation is Natural Resource, which supports the protection and extraction of aggregate material, but does not appear to provide specific Goal 5 protections.
Staff's Conclusion: There are no Goal 5 resource sites within the impact area. This Criterion does not apply.

> (E) Conflicts with agricultural practices; and

Applicants Findings: The subject property is within the Urban Growth Boundary of the City of Umatilla with the nearest agricultural activities over a mile away to the southwest and southeast.

There are also agricultural activities over a mile to the north across the Columbia River. No agricultural activities will be impacted by this operation.
Staff's Conclusion: There are no agricultural practices within the impact area.

(F) Other conflicts for which consideration is necessary in order to carry out ordinances that supersede Oregon DOGAMI regulations pursuant to ORS 517.780;

Applicants Findings: The City of Umatilla nor Umatilla County have ordinances that supersedes DOGAMI regulations.
Staff's Conclusion: This criterion does not apply.

(c) The local government shall determine reasonable and practicable measures that would minimize the conflicts identified under subsection (b) of this section. To determine whether proposed measures would minimize conflicts to agricultural practices, the requirements of ORS 215.296 shall be followed rather than the requirements of this section. If reasonable and practicable measures are identified to minimize all identified conflicts, mining shall be allowed at the site and subsection (d) of this section is not applicable. If identified conflicts cannot be minimized, subsection (d) of this section applies.

Applicants Findings: ODOT has identified the potential for impacts from noise blasting, and dust. These potential impacts will be minimized using the following actions and practices:

- Noise will be minimized by completing crushing activities during daylight hours.
- Impacts from blasting will be minimized by providing notice to sensitive users 48 hours prior to blasting. Sensitive users would be residences and medical facilities.
- Dust will be minimized by using water or other suppressive measures within the quarry and along gravel roads used for ingress and egress.

Staff's Conclusion: Staff concludes that the mitigation actions listed above will be sufficient to control negative consequences of the use. These actions will be included as conditions of approval.

(d) The local government shall determine any significant conflicts identified under the requirements of subsection (c) of this section that cannot be minimized. Based on these conflicts only, local government shall determine the ESEE consequences of either allowing, limiting, or not allowing mining at the site. Local governments shall reach this decision by weighing these ESEE consequences, with consideration of the following:
(A) The degree of adverse effect on existing land uses within the impact area;
(B) Reasonable and practicable measures that could be taken to reduce the identified adverse effects; and
(C) The probable duration of the mining operation and the proposed post-mining use of the site.

Applicants Findings: ODOT asserts that all identified conflicts can be minimized as described above.
Staff's Conclusion: The above criterion states "If reasonable and practicable measures are identified to minimize all identified conflicts, mining shall be allowed at the site and subsection (d) of this section is not applicable." Therefore, this criterion is not applicable.

(e) Where mining is allowed, the plan and implementing ordinances shall be amended to allow such mining. Any required measures to minimize conflicts, including special conditions and procedures regulating mining, shall be clear and objective. Additional land use review (e. g. , site plan review), if required by the local government, shall not exceed the minimum review necessary to assure compliance with these requirements and shall not provide opportunities to deny mining for reasons unrelated to these requirements, or to attach additional approval requirements, except with regard to mining or processing activities:
(A) For which the PAPA application does not provide information sufficient to determine clear and objective measures to resolve identified conflicts;
(B) Not requested in the PAPA application; or
(C) For which a significant change to the type, location, or duration of the activity shown on the PAPA application is proposed by the operator.

Applicants Findings: ODOT is requesting the Umatilla County and the City of Umatilla list the Powerline Quarry in their respective inventories and that the City of Umatilla approve mining. The narrative above identifies that ODOT has acknowledged potential conflicts and identified measures that can reduce or eliminate those same conflicts. Conditions limiting crushing and blasting to daylight hours, providing notice prior to blasting activities, and managing stormwater onsite are achievable.

Staff's Conclusion: As this is a preexisting use that is seeking goal 5 protection there will be no additional land use review required. The required measures to minimize conflict are listed above an will be required as a condition of approval.

(f) Where mining is allowed, the local government shall determine the post-mining use and provide for this use in the comprehensive plan and land use regulations. For significant aggregate sites on Class I, II and Unique farmland, local governments shall adopt plan and land use regulations to limit post-mining use to farm uses under ORS 215.203, uses listed under ORS 215.213(1) or 215.283(1), and fish and wildlife habitat uses, including wetland mitigation banking. Local governments shall coordinate with DOGAMI regarding the regulation and reclamation of mineral and aggregate sites, except where exempt under ORS 517.780.

Applicants Findings: It is anticipated that the site would be appropriate for industrial, commercial, or open space uses at the time the quarry was no longer needed as an aggregate source. Post mining use will be consistent with the F-2 General Rural Zone and comply with DOGAMI Reclamation Plan requirements. The site is within the City of Umatilla Urban Growth Boundary.

Staff's Conclusion: It is expected that when the site is no longer viable for its use under goal 5 protections that it will be utilized as a use approved in the F-2 General Rural Zone or whatever zone may be applied to the site at that time.

(g) Local governments shall allow a currently approved aggregate processing operation at an existing site to process material from a new or expansion site without requiring a reauthorization of the existing processing operation unless limits on such processing were established at the time it was approved by the local government.

Applicants Findings: Powerline Quarry is not an existing significant aggregate resource on either Umatilla County or the City of Umatilla's inventory of significant sites. This review criterion does not apply.
Staff's Conclusion: The City of Umatilla does not have a goal 5 natural resource for aggregate. This criterion does not apply.

(7) Except for aggregate resource sites determined to be significant under section (4) of this rule, local governments shall follow the standard ESEE process in OAR 660-023-0040 and 660-023-0050 to determine whether to allow, limit, or prevent new conflicting uses within the impact area of a significant mineral and aggregate site. (This requirement does not apply if, under section (5) of this rule, the local government decides that mining will not be authorized at the site.)
Applicants Findings: ODOT has provided an ESEE analysis. The analysis supports a decision to limit new conflicting uses within the buffer.
Staff's Conclusion: The applicant provided ESEE analysis is more than adequate. This analysis will be used by the City to determine the best course of action.

660-023-0040 ESEE Decision Process

(1) Local governments shall develop a program to achieve Goal 5 for all significant resource sites based on an analysis of the economic, social, environmental, and energy (ESEE) consequences that could result from a decision to allow, limit, or prohibit a conflicting use. This rule describes four steps to be followed in conducting an ESEE analysis, as set out in detail in sections (2) through (5) of this rule. Local governments are not required to follow these steps sequentially, and some steps anticipate a return to a previous step. However, findings shall demonstrate that requirements under each of the steps have been met, regardless of the sequence followed by the local government. The ESEE analysis need not be lengthy or complex, but should enable reviewers to gain a clear understanding of the conflicts and the consequences to be expected. The steps in the standard ESEE process are as follows:

(a) Identify conflicting uses;

Applicants Findings: The subject property is within the Urban Growth Boundary of the City of Umatilla and is zoned F-2 General Rural Zone which allows a variety of farm and rural residential uses, some outright and others conditionally. Some of these uses could create conflicts with an aggregate operation. Conflicts are most likely to arise when a new use would place people, living or working, within the buffer area. Those uses include homes, schools or churches, parks or certain recreation facilities, farm stands, commercial activities such as veterinarians, and other similar uses.
Staff's Conclusion: As this is an existing site the biggest potential conflict of use would be new uses that locate into the area. Due to the potential for conflict the applicants proposed 1,500-foot buffer is accepted by the City.

(b) Determine the impact area;

Applicants Findings: A 1,500-foot buffer extending from the aggregate site boundary.
Staff's Conclusion: A 1,500-foot buffer will be sufficient according the maximum distance the ORS allows for.

(c) Analyze the ESEE consequences; and

Applicants Findings: See the analysis below.
Staff's Conclusion: This criterion is addressed below.

(d) Develop a program to achieve Goal 5.
Applicants Findings: See a full analysis below.
Staff's Conclusion: This criterion is addressed below.

(2) Identify conflicting uses. Local governments shall identify conflicting uses that exist, or could occur, with regard to significant Goal 5 resource sites. To identify these uses, local governments shall examine land uses allowed outright or conditionally within the zones applied to the resource site and in its impact area. Local governments are not required to consider allowed uses that would be unlikely to occur in the impact area because existing permanent uses occupy the site. The following shall also apply in the identification of conflicting uses:
Applicants Findings: City of Umatilla Planning staff, under this provision, will need to identify conflicting uses that exist, or could occur, relative to this site. The F-2 General Rural Zone is applied to the subject and surrounding property which allows a variety of farm and rural residential uses. As previously stated ODOT is concerned with activities that might be negatively impacted by mining activities including processing and stockpiling. ODOT has anticipated conflicting uses the city could identify and based the ESEE analysis attached to this application on these uses.
Staff's Conclusion: Conflicting uses that can be identified at this time are homes, schools or churches, parks or certain recreation facilities, farm stands, commercial activities such as veterinarians, and other similar uses.

(a) If no uses conflict with a significant resource site, acknowledged policies and land use regulations may be considered sufficient to protect the resource site. The determination that there are no conflicting uses must be based on the applicable zoning rather than ownership of the site. (Therefore, public ownership of a site does not by itself support a conclusion that there are no conflicting uses.)
Applicants Findings: ODOT is requesting that conflicting uses be identified, and the site be protected from those uses within the buffer area.
Staff's Conclusion: The previously identified conflicting uses will be restricted within a 1500-foot buffer by an overlay zone. Staff is working on creation of the 1500-foot buffer zone overlay but it is not included in this application.

(b) A local government may determine that one or more significant Goal 5 resource sites are conflicting uses with another significant resource site. The local government shall determine the level of protection for each significant site using the ESEE process and/or the requirements in OAR 660-023-0090 through 660-023-0230 (see OAR 660-023-0020(1)).
Applicants Findings: There are no county inventoried Goal 5 resource sites within the impact area for Powerline Quarry. The City of Umatilla Comprehensive Plan map designation is Natural Resource, which supports the protection and extraction of aggregate material, but does not appear to provide specific Goal 5 protections.
Staff's Conclusion: There are no county inventoried Goal 5 resource sites within the impact area for Powerline Quarry. This criterion is not applicable.

(3) Determine the impact area. Local governments shall determine an impact area for each significant resource site. The impact area shall be drawn to include only the area in which allowed uses could adversely affect the identified resource. The impact area defines the geographic limits within which to conduct an ESEE analysis for the identified significant resource site.
Applicants Findings: The impact area for an aggregate site is 1,500 feet, as specified by OAR 660-023-0180(5)(a). This is the buffer area used for this analysis.
Staff's Conclusion: The impact area for an aggregate site is 1,500 feet, as specified by OAR 660-023-0180(5)(a). This is the buffer area used for this analysis.

(4) Analyze the ESEE consequences. Local governments shall analyze the ESEE consequences that could result from decisions to allow, limit, or prohibit a conflicting use. The analysis may address each of the identified conflicting uses, or it may address a group of similar conflicting uses. A local government may conduct a single analysis for two or more resource sites that are within the same area or that are similarly situated and subject to the same zoning. The local government may establish a matrix of commonly occurring conflicting uses and apply the matrix to particular resource sites in order to facilitate the analysis. A local government may conduct a single analysis for a site containing more than one significant Goal 5 resource. The ESEE analysis must consider any applicable statewide goal or acknowledged plan requirements, including the requirements of Goal 5. The analyses of the ESEE consequences shall be adopted either as part of the plan or as a land use regulation.
Applicants Findings: ODOT is requesting that the City of Umatilla determine that future dwelling or residential use and other noise sensitive uses be limited to protect the mining area from encroachment. The types of uses that have potential to pose a conflict with the quarry include residential uses, and "gathering spaces" - certain public or semi-public uses, churches, private and public parks, golf courses, community centers, residential homes, room and board operations, and schools.

Umatilla County's Comprehensive Plan Finding 38 states, "extraction of non-renewable aggregate and mineral resources requires ongoing exploration, reclamation, separation from adjacent incompatible land uses and access" and has three supporting Policies. It is the "separation from adjacent incompatible land uses" that ODOT is seeking to assure to limit future impacts from the Powerline Quarry.

On page D-196 of the Umatilla County Technical Report it states the following, "About 30 '3C' and '2A' resource sites are owned [or] operated by the Oregon State Highway Department and County Road Department. Most of these sites are small (under four acres) and are used as material resources for road repair and construction. Costs and energy are saved by having scattered material sources available through the county." It is in support of this statement that ODOT is seeking protection for this quarry and others within its network throughout Umatilla County.

The ESEE Analysis follows:

ESEE consequences related to review criteria for dwellings and gathering spaces in the 1,500-foot impact area surrounding the Powerline Canyon Quarry			
	Prohibit dwellings and gathering spaces	*Condition the placement of new dwellings and gathering spaces*	*No change to review standards for dwellings and gathering spaces*
Economic Consequences	**Consequences related to new use on neighboring properties.** There may be some negative economic impact to neighboring property owners if new dwellings or gathering places were not allowed within 1500 feet of the quarry boundary. Since only a portion of properties, all with a 19-acre minimum lot size requirement for a dwelling, would be affected, the negative impact would be small. There are also challenges to future residential development in the impact area due to the amount and type of infrastructure installed in the 1500-foot buffer. This decreases the likelihood of residential development and lowers the potential negative consequences of prohibiting dwellings. **Consequences related to loss or interruption of quarry access.** The economic benefit of preserving ODOT's ability to access material from sites within the state's network of material sources is well	**Consequences related to new use on neighboring properties.** The economic impact to neighboring property owners would be neutral. A requirement for a waiver of remonstrance would not restrict the use of the property allowed in the underlying zone. Similar wavers are required by counties around the state as a condition of approval for a new residential structure in a farm or forest zone. These wavers, required by ORS 215.213 and 215.283, restrict a landowner's ability to pursue a claim for relief or cause of action alleging injury from farming or forest practices. While the property is not zoned for Exclusive Farm Use it is zoned General Rural Zone which is designed to maintain the openness and rural nature of the countryside. Without evidence that the widespread use of such wavers has negatively impacted property values or development rights, it is reasonable to conclude	**Consequences related to new use on neighboring properties.** The economic consequence for property owners would be neutral. This decision would maintain the current approval criteria for new residences and gathering spaces in the impact area. **Consequences related to loss or interruption of quarry access.** The economic impact would be negative. Interruptions in use of a quarry, due to complaints and nuisance lawsuits, have cause delays and increased costs for road projects across the state. Development of this quarry supports economically efficient staging of road maintenance and construction projects in the region. New noise sensitive uses locating within 1500 feet of the quarry will bring the possibility that

	documented. Offering a state-owned aggregate site on a road project is known to increase the number of contractors bidding on a project. This enables more competition, which results in lower project costs. As this request is seeking approval of a site owned by ODOT since 1951 this is a less costly strategy than seeking a new site. The Powerline Quarry will provide material for road maintenance and construction along Highways 730 and 395 and Interstate 82 in northwest Umatilla County. All commercial users of these highways will also benefit economically from efficient maintenance of these roads.	that the proposed limit on new conflicting uses in the impact area of the Powerline Quarry will have no negative economic consequence. **Consequences related to loss or interruption of quarry access.** The economic benefit would be the same as that for a decision to prohibit uses since the proposed "limit" is to require that new uses would be permitted on the condition that the applicant except mining activity on this significant aggregate site.	limitations on quarry activity will be sought by people who are bothered by mining activity. The potential negative economic impact ranges from small to exceptionally large. All commercial users of state and county roads in the service area may also experience negative economic consequences if maintenance of these roads is compromised due to less efficient access to aggregate material.
	Prohibit dwellings and gathering spaces	*Condition the placement of new dwellings and gathering spaces*	*No change to review standards for dwellings and gathering spaces*
Social Consequences	**Consequences related to new use on neighboring properties.** Removing the option to place a dwelling, which otherwise meets all existing review criteria, within 1500 feet of the quarry boundary, would have a negative social consequence. This would be similar if gathering spaces were also prohibited. The social consequences stem from	**Consequences related to new use on neighboring properties.** The social impact to neighboring property owners would be neutral if acceptance of the mining activity were added as a condition of approval for new dwellings and uses related to social gatherings within 1500 feet of the quarry boundary. Options	**Consequences related to new use on neighboring properties.** The social impact to neighboring property owners would be neutral if new dwellings and social gathering spaces within 1500 feet of the quarry boundary were allowed under the existing review criteria.

	a landowner's desire to have reasonable options and flexibility when making choices about what they can and cannot do on their land. **Consequences related to loss of quarry access.** Noncommercial users of state and county roads within the region derive social benefit from using these roads. Efficient road maintenance will preserve this benefit.	available to property-owners would not be reduced. Dwellings and gathering spaces that meet existing review criteria would be allowed, provided the applicant agreed to accept the mining activity approved by the county. **Consequences related to loss of quarry access.** Noncommercial users of state and county roads within the region derive social benefit from using these roads. Efficient road maintenance will preserve this benefit.	**Consequences related to loss of quarry access.** Noncommercial users of state and county roads within the region derive social benefit from using these roads. Obstacles to efficient road maintenance, which could result from opposition to mining activity, would have a negative social impact.
	Prohibit dwellings and gathering spaces	*Condition the placement of new dwellings and gathering spaces*	*No change to review standards for dwellings and gathering spaces*
Environmental Consequences	Consequences related to new use on neighboring properties. There are no environmental consequences identified that stem from prohibiting new dwellings or social gathering spaces in the impact area. Consequences related to loss of quarry access. Efficient road maintenance practices include obtaining	Consequences related to new use on neighboring properties. There could be a negative environmental consequence from noise if new dwellings or social gathering spaces were limited in the impact area. New dwellings and social gathering spaces in the impact area could be authorized on the condition that the applicant accept the mining activity approved by this decision. This approach assures that a property owner will make an informed decision when locating a	Consequences related to new use on neighboring properties. There could be a negative environmental consequence from noise if new dwellings and social gathering spaces were allowed in the impact area. Different than the option to limit a decision, there would be no mechanism in the city or county's approval process to inform property owners of the authorized mining activity. This would result in a higher possibility for a residence or social gathering space to be located in the

	aggregate material from a quarry close to the project site. There will be some environmental benefit from fewer vehicle emissions when truck travel is minimized.	new use. If they decide to locate within the impact area, they will be exposed to noise impacts when mining activities are conducted on the site. Consequences related to loss of quarry access. Efficient road maintenance practices include obtaining aggregate material from a quarry close to the project site. There will be some environmental benefit from fewer vehicle emissions when truck travel is minimized	impact area and a higher potential for a negative consequence. Consequences related to loss of quarry access. There may be some negative environmental consequence if new uses in the impact area oppose mining activity and pose an obstacle to the use of this site. Efficient road maintenance practices include obtaining aggregate material from a quarry close to the project site. Vehicle emissions will increase if trucks have to travel further to access material.
	Prohibit dwellings and gathering spaces	*Condition the placement of new dwellings and gathering spaces*	*No change to review standards for dwellings and gathering spaces*
Energy Consequences	Consequences related to new use on neighboring properties. There are no energy consequences identified that stem from prohibiting new dwellings or social gathering spaces in the impact area. Consequences related to loss of quarry access. Efficient road maintenance practices include obtaining aggregate material from a quarry close to the project site. There will be some energy benefit from	Consequences related to new use on neighboring properties. There are no energy consequences identified that stem from limiting new dwellings or social gathering spaces in the impact area. Consequences related to loss of quarry access. Efficient road maintenance practices include obtaining aggregate material from a quarry close to the project site. There will be some energy benefit from reduced use of fuel when truck travel is minimized.	Consequences related to new use on neighboring properties. There are no energy consequences identified that stem from allowing new dwellings or social gathering spaces in the impact area. Consequences related to loss of quarry access. Efficient road maintenance practices include obtaining aggregate material from a quarry close to the project site. There will be some negative energy consequences from additional fuel use if

	reduced use of fuel when truck travel is minimized.		truck travel is increased due to loss of access to this quarry.

Staff's Conclusion: Staff find the applicants ESEE analysis table to be sufficient for this application and will be used by staff to make a determination.

(5) Develop a program to achieve Goal 5. Local governments shall determine whether to allow, limit, or prohibit identified conflicting uses for significant resource sites. This decision shall be based upon and supported by the ESEE analysis. A decision to prohibit or limit conflicting uses protects a resource site. A decision to allow some or all conflicting uses for a particular site may also be consistent with Goal 5, provided it is supported by the ESEE analysis. One of the following determinations shall be reached with regard to conflicting uses for a significant resource site:

(a) A local government may decide that a significant resource site is of such importance compared to the conflicting uses, and the ESEE consequences of allowing the conflicting uses are so detrimental to the resource, that the conflicting uses should be prohibited.
(b) A local government may decide that both the resource site and the conflicting uses are important compared to each other, and, based on the ESEE analysis, the conflicting uses should be allowed in a limited way that protects the resource site to a desired extent.
(c) A local government may decide that the conflicting use should be allowed fully, notwithstanding the possible impacts on the resource site. The ESEE analysis must demonstrate that the conflicting use is of sufficient importance relative to the resource site, and must indicate why measures to protect the resource to some extent should not be provided, as per subsection (b) of this section.

Applicants Findings: ODOT is requesting that the City of Umatilla and Umatilla County determine that the resource site is important, and based on the ESEE analysis, the identified conflicting uses which are also important should be allowed in a limited way to protect the Powerline Quarry. The protection sought from potential conflicting uses would be within the 1,500-foot impact area and for the life of the Powerline Quarry. Specifically, local authorization of new residential and gathering spaces should be limited to achieve that goal.
Staff's Conclusion: Based on the analysis that is provided above, both the resource site and conflicting uses are important compared to each other. A condition of approval will be required on all new uses that locate in the area to sign a memorandum of understanding that the locating near the subject property will have the potential for conflict.

660-023-0050 Programs to Achieve Goal 5

(1) For each resource site, local governments shall adopt comprehensive plan provisions and land use regulations to implement the decisions made pursuant to OAR 660-023-0040(5). The plan shall describe the degree of protection intended for each significant resource site. The plan and implementing ordinances shall clearly identify those conflicting uses that are allowed and the specific standards or limitations that apply to the allowed uses. A program to achieve Goal 5 may include zoning measures that partially or fully allow conflicting uses (see OAR 660-023-0040(5)(b) and (c)).

Applicants Findings: ODOT would request that the City of Umatilla and Umatilla County take action to facilitate protection of this aggregate site by mapping the 1,500-foot impact area within the Comprehensive Plan map and acknowledge that conflicting residential and gathering space uses identified previously will be limited and require that activities approved through a land use permit process will be required to waive rights to remonstrate against aggregate mining activities allowed by this decision. This would be consistent with practices required by Umatilla County Development Code provisions found at 152.063(D), which are applicable to permitted mining activities outside the UGB. The intent of this request is not to disallow these activities but to ensure that applicants for these types of uses be made aware of the mining operation and waive their rights to remonstrate against aggregate mining activities allowed by this decision.
Staff's Conclusion: Staff will develop an overlay zone that matches the 1,500-foot impact area in which a non-remonstrance will be required if any conflicting developments are proposed. It is expected that the 1,500-foot impact area will be effectively managed by this overlay zone on the City of Umatilla zoning map.

(2) When a local government has decided to protect a resource site under OAR 660-023-0040(5)(b), implementing measures applied to conflicting uses on the resource site and within its impact area shall contain clear and objective standards. For purposes of this division, a standard shall be considered clear and objective if it meets any one of the following criteria:

(a) It is a fixed numerical standard, such as a height limitation of 35 feet or a setback of 50 feet;
(b) It is a nondiscretionary requirement, such as a requirement that grading not occur beneath the dripline of a protected tree; or
(c) It is a performance standard that describes the outcome to be achieved by the design, siting, construction, or operation of the conflicting use, and specifies the objective criteria to be used in evaluating outcome or performance. Different performance standards may be needed for different resource sites. If performance standards are adopted, the local government shall at the same time adopt a process for their application (such as a conditional use, or design review ordinance provision).

Applicants Findings: ODOT has requested protection consistent with OAR 660-023-0040(5)(b) seeking that identified conflicting uses be limited within the buffer area as discussed above.
Staff's Conclusion: The chosen overlay zone is clear and objective as it prescribes a specific area (1,500) in which a land use is limited (Non-remonstrance). The 1,500 buffer is clear and objective in the regard that if a proposed use is in the numerical buffer area it will be restricted and if it is outside of the numerical buffer area it will be allowed as long as it is consistent with the existing zoning.

(3) In addition to the clear and objective regulations required by section (2) of this rule, except for aggregate resources, local governments may adopt an alternative approval process that includes land use regulations that are not clear and objective (such as a planned unit development ordinance with discretionary performance standards), provided such regulations:

(a) Specify that landowners have the choice of proceeding under either the clear and objective approval process or the alternative regulations; and
(b) Require a level of protection for the resource that meets or exceeds the intended level determined under OAR 660-023-0040(5) and 660-023-0050(1).

Applicants Findings: These provisions would not be applicable as the request is related to

aggregate resources.
Staff's Conclusion: This criterion does not apply as this application is directly related to aggregate resources.

The City of Umatilla Comprehensive Plan is applicable, specifically Goal 2 Land Use Planning and Goal 5 Natural Resources, Scenic and Historic Areas, and Open Spaces. Goal 2 Section 2.1 Land Use Planning Background and Discussion defines the Natural Resource (NR) plan district as follows, "This district applies outside of the city limits, within the Urban Growth Boundary, to areas that contain high-quality aggregate and basalt. The district is intended to identify the general location of aggregate deposits and to protect the aggregate and basalt supply for future needs. It is not intended to restrict current land use, which is subject to Umatilla County Zoning, and presently includes a variety of industrial and residential uses. The "NR" areas should be reviewed to determine if the Comprehensive Plan designation remains appropriate."

Goal 5 Section 5.1 Natural Resources Background and Discussion 5.1.300 Gravel states, "Gravel extraction is also an important natural resource feature of the Umatilla area. Most of the areas currently being utilized are situated south of Sharp's Corner. The need for this material will no doubt increase with the advent of I-82 construction and the McNary second powerhouse. These gravel extraction areas have been retained in the Comprehensive Plan and are shown on the *Developable Areas* map, *Figure 5.1-3*."
Applicants Findings: ODOT supports the current Comprehensive Plan designation of NR as the subject property for this application has been and is an aggregate site with known inventory of both basalt and sand/gravel deposits. The intent of this application is to protect the site for future aggregate use and to allow mining, processing, and stockpiling.

The following Land Use Planning Findings support the request of ODOT:
2.5.101 Land uses should be located to take advantage of existing systems and physical features, and to minimize development costs.
2.5.102 Land uses should be situated so as to achieve compatibility and to avoid conflicts between adjoining uses.
2.5.105 Uses of the land which have an adverse effect on the environment should be regulated consistent with State and federal guidelines.

The following Land Use Planning Policies support the request of ODOT:
2.6.101 The City will maintain a Comprehensive Plan which designates a range of land use areas based on findings with respect to:
- Natural resource capacity
- Existing land use patterns

ODOT requests that the City of Umatilla add appropriate language to the Comprehensive Plan as part of Goal 5 subsection 5.1.300 Gravel adding the subject property as a significant site with Goal 5 protections and allowing mining, processing, and stockpiling. ODOT also requests that the City of Umatilla map the aggregate site and the impact area to implement the Goal 5 program to protect this resource site.
Staff's Conclusion: The purpose of this application is to allow for the City of Umatilla Comprehensive plan to account for and protect a specific aggregate use within the Urban Growth

Boundary. With a successful approval of this application the subject property will be listed as a significant site with Goal 5 protections, the aforementioned overlay zone and non- remonstrance will be the instruments used to successfully implement the Goal 5 program.

The Umatilla County Comprehensive Plan Chapter 8. OPEN SPACE, SCENIC AND HISTORIC AREAS, AND NATURAL RESOURCES would be applicable. It states, "this section includes those areas that, if managed wisely, will protect, conserve, and enhance the natural and cultural elements of the county." Specifically Mineral and Aggregate Resources are described as follows, "although no minerals of commercial value are known to exist in the county, aggregates are relatively common. Aggregates include sand, crushed and uncrushed gravel, and stone. They are primarily used for the construction of new homes, streets, sewers, churches, businesses, etc. Since long truck hauls are costly, local sources must remain available." Finding 38 states, "extraction of non-renewable aggregate and mineral resources requires ongoing exploration, reclamation, separation from adjacent incompatible land uses and access" with three supporting Policies. And Finding 41 states, "Several aggregate sites were determined to be significant enough to warrant protection from surrounding land uses in order to preserve the resource" with the associated Policy listing those significant sites.
Applicants Findings: ODOT requests, based on this application and the evidence provided, that Umatilla County co-adopt the City of Umatilla decision providing protection to the aggregate site and allowing mining, processing, and stockpiling of both the basalt and gravel resources.
Staff's Conclusion: City of Umatilla supports the request for Umatilla County to co-adopt the City of Umatilla decision.

The Joint Management Agreement between Umatilla County and the City of Umatilla is applicable. Sections or portions of Sections 2.1.2 City Processing of Comprehensive Plan Text, Plan Map and Zoning Map Amendments; 2.1.3 County Adoption of City Comprehensive Plan Text, Plan Map and Zoning Map Amendments; and 2.1.4 Adoption or Amendment to Land Use Regulations; Plan and Zone Maps are applicable. There are also provisions related to annexation, Section 3, and roads, Section 4, that are also considered. The requirements, many of which are procedural, are included below with appropriate responses.

2.1.2 City Processing of Comprehensive Plan Text, Plan Map and Zoning Map Amendments.
a. The City shall have lead responsibility for reviewing and adopting amendments to the Comprehensive Plan text, plan map and zoning map for the UGA. Amendments may be initiated by the City, the County, or an affected person, by application to the City.
Applicants Findings: Application has been made to the City of Umatilla.
Staff's Conclusion: The amendment proposal has been made by the applicant and the City has taken the lead in processing the request.

b. Amendment applications shall be processed by the City, with notification to the County at least twenty (20) days prior to the City Planning Commission's first hearing on the proposed amendment.
Applicants Findings: The applicant supports notice to Umatilla County as required.
Staff's Conclusion: Notice was mailed to Umatilla County Planning Department 21 days prior to the City of Umatilla's first hearing on the matter at Planning Commission.

c. Any comments received from the County shall be considered by the City Planning Commission when making its recommendation to the City Council.
Applicants Findings: The applicant supports incorporation of any comments received from Umatilla County.
Staff's Conclusion: No comments have been received at the time of these findings, if any are received they will be included in the recommendation that the City Planning Commission makes.

d. The County may also provide comments prior to the City Council hearing, in which case, the Council shall consider the County's comments in making its final decision.
Applicants Findings: The applicant supports incorporation of any comments received from Umatilla County
Staff's Conclusion: The City will incorporate any comments made by Umatilla County into the record for the City Councils decision.

e. The City shall provide written notification of the City Council's final decision to the County within five (5) working days.
Applicants Findings: The applicant supports providing the City's final decision timely to Umatilla County.
Staff's Conclusion: Notice will be made within five working days to Umatilla County planning department.

2.1.3 County Adoption of City Comprehensive Plan Text, Plan Map and Zoning Map Amendments.
a. All amendments to the Comprehensive Plan text, plan map and zoning map affecting the UGA shall be referred to the County for co-adoption.
Applicants Findings: The applicant supports co-adoption of these changes by Umatilla County
Staff's Conclusion: The City supports the Counties co-adoption of any changes made by the Cities governing bodies.

b. The County must adopt the amendments approved by the City for these to be applicable in the UGA. The adoption shall be scheduled for hearing within sixty (60) days of City transmittal.
Applicants Findings: The applicant is prepared to assist the City of Umatilla and Umatilla County to achieve this timely requirement.
Staff's Conclusion: The City supports this requirement.

c. If the City and County disagree on the proposed amendment, either party may request a conflict resolution process to resolve the conflict.
Applicants Findings: The applicant supports conflict resolution but is hopeful that none would be needed.
Staff's Conclusion: In preliminary discussions with the Umatilla County Planning Department it is not expected that a disagreement will occur. If one does occur the City supports the preapproved conflict resolution process.

2.1.4 Adoption or Amendment to Land Use Regulations; Plan and Zone Maps
a. It is the intent of the City and County to jointly develop and adopt a single set of land use regulations and plan and zone map designations for properties within the City and UGA.

Applicants Findings: Co-adoption would maintain consistency between the City of Umatilla and Umatilla County.
Staff's Conclusion: The proposed co-adoption will allow for a single set of land use regulations and plan and zone map designations for properties within the City and UGA.

b. The City agrees to adopt and apply the (1972) County zoning map designations and land use regulations to lands located within the UGA until adoption and implementation of City land use regulations and zoning designations for lands within the UGA.
Applicants Findings: This application will maintain consistency and provide updates to the City of Umatilla Comprehensive Plan relative to the Powerline quarry.
Staff's Conclusion: The current zoning for the subject property is from the 1972 County zoning map designations and land use regulations.

c. The City shall have lead responsibility for reviewing and adopting amendments to land use regulations and to the Plan Map or Zoning Map for the UGA. Amendments may be initiated by the City, the County, or an affected person, by application to the City.
Applicants Findings: Application was made to the City of Umatilla with application materials also submitted to Umatilla County. This application is proposed to be co-adopted by Umatilla County.
Staff's Conclusion: The amendment proposal has been made by the applicant and the City has taken the lead in processing the request.

d. The City shall notify the County of proposed amendments at least (20) days prior to the City Planning Commission first hearing on the proposed amendment.
Applicants Findings: The applicant supports notice to Umatilla County.
Staff's Conclusion: Notice was mailed to Umatilla County Planning Department 21 days prior to the City of Umatilla's first hearing on the matter at Planning Commission.

e. The County may comment on the proposed amendment in writing, or in person, before the Planning Commission. The City Planning Commission shall consider the County's comments in making a recommendation to the City Council.
Applicants Findings: The applicant welcomes comment by Umatilla County.
Staff's Conclusion: The City welcomes comment by Umatilla County.

f. The County may review and comment on the Planning Commission's recommendation to the City Council in writing, or in person at the City Council's public hearing on the amendment. The City Council shall consider the County's comments in making a final decision.
Applicants Findings: The applicant welcomes comment by Umatilla County.
Staff's Conclusion: The City welcomes comment by Umatilla County.

g. The City shall notify the County of the City Council's final decision within five (5) working days.
Applicants Findings: The applicant supports timely notice to Umatilla County by the City of Umatilla.
Staff's Conclusion: Notice will be made within five working days to Umatilla County planning department.

h. All amendments to the land use regulations affecting the UGA shall be referred to the County for co-adoption.
Applicants Findings: The applicant supports co-adoption.
Staff's Conclusion: The City will refer the decision to the County for co-adoption.

i. The County must adopt the land use regulation amendments approved by the City for these to be applicable in the UGA. The adoption shall be scheduled for hearing within sixty (60) days of City transmittal.
Applicants Findings: The applicant supports timely action by Umatilla County to co-adopt.
Staff's Conclusion: The City supports this requirement.

j. If the City and County disagree on the proposed amendments, either party may request a conflict resolution process to resolve the conflict.
Applicants Findings: The applicant supports conflict resolution but is hopeful that none would be needed.
Staff's Conclusion: In preliminary discussions with the Umatilla County Planning Department it is not expected that a disagreement will occur. If one does occur the City supports the preapproved conflict resolution process.

Analysis of the Statewide Planning Goals 1 through 14 follows.

Goal 1 Citizen Involvement: To develop a citizen involvement program that insures the opportunity for citizens to be involved in all phases of the planning process.
Applicants Findings: Both the City of Umatilla and Umatilla County's Comprehensive Plan's and development codes outline their citizen involvement program that includes the activities of the Planning Commission and provides for the public hearing process with its required notice provisions. These notice provisions provide for adjoining and affected property owner notice; notice to interested local, state, and federal agencies; and allows for public comment to the process. More specifically this request will be publicly noticed and discussed at multiple public hearings and will be subject to input from citizens.
Staff's Conclusion: Notice has been sent out to those required by code. In addition, notice will be placed in the newspaper 10 days prior to the first hearing. Citizen Involvement is encouraged.

Goal 2 Planning: To establish a land use planning process and policy framework as a basis for all decisions and actions related to use of land and to assure an adequate factual base for such decisions and actions.
Applicants Findings: Goal 2 establishes the underlining process that a county or a city needs to utilize when considering changes to their Comprehensive Plans and development codes. This application meets those requirements for this request.
Staff's Conclusion: The above findings are sufficient to meet this criterion.

Goal 3 Agricultural Lands: To preserve and maintain agricultural lands.
Applicants Findings: Goal 3 requires counties to preserve and maintain agricultural lands for farm uses. Counties must inventory agricultural lands and protect them by adopting exclusive

farm use zones consistent with Oregon Revised Statute 215.203 et. seq. This request is not subject to Goal 3 as the aggregate site under review is within the urban growth boundary of the City of Umatilla.
Staff's Conclusion: This request is not subject to Goal 3 as the aggregate site under review is within the urban growth boundary of the City of Umatilla.

Goal 4 Forest Lands: To conserve forest lands by maintaining the forest land base and to protect the state's forest economy by making possible economically efficient forest practices that assure the continuous growing and harvesting of forest tree species as the leading use on forest land consistent with sound management of soil, air, water, and fish and wildlife resources and to provide for recreational opportunities and agriculture.
Applicants Findings: There are no forest lands impacted by this request and none within the City of Umatilla.
Staff's Conclusion: There are no forest lands impacted by this request and none within the City of Umatilla.
Goal 5 Open Spaces, Scenic and Historic Areas, and Natural Resources: To protect natural resources and conserve scenic and historic areas and open spaces.
Applicants Findings: The process undertaken within this application is to protect the subject property under Goal 5 as a significant aggregate site. The subject property does not have any overlays or other known cultural or historical sites. There are no mapped wetlands on the subject property and no floodplain has been mapped.

This application for a Comprehensive Plan amendment to protect an aggregate resource has been reviewed under Oregon Administrative Rule 660-023-0180, the process required under Goal 5.
Staff's Conclusion: This application for a Comprehensive Plan amendment to protect an aggregate resource has been reviewed under Oregon Administrative Rule 660-023-0180, the process required under Goal 5.

Goal 6 Air, Water and Land Resources Quality: To maintain and improve the quality of the air, water and land resources of the state.
Applicants Findings: Goal 6 addresses the quality of air, water and land resources. In the context of comprehensive plan amendments, a local government complies with Goal 6 by explaining why it is reasonable to expect that the proposed uses authorized by the plan amendment will be able to satisfy applicable federal and state environmental standards, including air and water quality standards. Goal 6 is addressed through a condition of approval that DEQ air quality and stormwater permits will be required as determined by DEQ.
Staff's Conclusion: Goal 6 is addressed through a condition of approval that DEQ air quality and stormwater permits will be required as determined by DEQ.

Goal 7 Areas Subject to Natural Hazards and Disasters: To protect people and property from natural hazards.
Applicants Findings: Goal 7 is concerned with the identification and mitigation of natural hazards. The subject property does not have any known natural hazards.
Staff's Conclusion: The subject property does not have any known natural hazards.

Goal 8 Recreation Needs: To satisfy the recreational needs of the citizens of the state and visitors and, where appropriate, to provide for the siting of necessary recreational facilities including destination resorts.
Applicants Findings: No recreation components are included in this application.
Staff's Conclusion: No recreation components are included in this application.

Goal 9 Economy: To provide adequate opportunities throughout the state for a variety of economic activities vital to the health, welfare, and prosperity of Oregon's citizens.
Applicants Findings: Goal 9 requires local governments to adopt comprehensive plans and policies that contribute to a stable and healthy economy. The City of Umatilla has just completed an update to Goal 9 that included an Economic Opportunities Analysis (EOA) outlining the need for additional employment lands. Umatilla County has a comprehensive plan and technical report that has been acknowledged to comply with Goal 9. Aggregate is a necessary component to the maintenance and safe operation of the highway and road network that is essential for residents, businesses, and recreation and tourism activities identified in the EOA.
Staff's Conclusion: The subject property will allow for the efficient maintenance of roads which in turn contributes to a healthy economy.

Goal 10 Housing: To provide for the housing needs of citizens of the state.
Applicants Findings: Housing is not a consideration of this application.
Staff's Conclusion: This criterion does not apply.

Goal 11 Public Services: To plan and develop a timely, orderly and efficient arrangement of public facilities and services to serve as a framework for urban and rural development.
Applicants Findings: Goal 11 requires local governments to plan and develop a timely, orderly, and efficient arrangement of public facilities and services. The goal provides that urban and rural development be guided and supported by types and levels of services appropriate for, but limited to, the needs and requirements of the area to be served. The approval of this request would support the local highway road network that provides for the safe movement of residents, delivery of goods, and allows for recreation and tourism in the region.
Staff's Conclusion: The approval of this request would support the local highway road network that provides for the safe movement of residents, delivery of goods, and allows for recreation and tourism in the region.

Goal 12 Transportation: To provide and encourage a safe, convenient and economic transportation system.
Applicants Findings: Goal 12 requires local governments to provide and encourage a safe, convenient, and economic transportation system. The approval of this request is consistent with the City of Umatilla and Umatilla County's Transportation System Plans and the Oregon Highway Plan.
Staff's Conclusion: The approval of this request is consistent with the City of Umatilla and Umatilla County's Transportation System Plans and the Oregon Highway Plan.

Goal 13 Energy: To conserve energy.
Applicants Findings: Goal 13 directs local jurisdictions to manage and control land and uses developed on the land to maximize the conservation of all forms of energy, based on sound

economic principles. Having an ODOT material source efficiently located in their service district can reduce haul length and therefore fuel usage and energy consumption.
Staff's Conclusion: Having an ODOT material source efficiently located in their service district can reduce haul length and therefore fuel usage and energy consumption.

Goal 14 Urbanization: To provide for an orderly and efficient transition from rural to urban land use, to accommodate urban population and urban employment inside urban growth boundaries, to ensure efficient use of land, and to provide for livable communities.
Applicants Findings: The approval of this request is consistent with Goal 14. The subject property is within the urban growth boundary for the city of Umatilla. Aggregate extraction is one of the uses allowed conditionally in this area.
Staff's Conclusion: The subject property is within the urban growth boundary for the city of Umatilla. Aggregate extraction is one of the uses allowed conditionally in this area.

Applicants Conclusion:
ODOT has provided within this narrative and with other information provided as part of the application package evidence and testimony in support of protection for the Powerline Quarry. Specifically, ODOT is requesting: 1) that the Powerline Quarry site of approximately 20 acres be listed as a significant aggregate resource within the City of Umatilla Comprehensive Plan; 2) that the City of Umatilla allows mining, processing, and stockpiling on the site; 3) that the City of Umatilla Comprehensive Plan and plan map be amended to implement a decision to protect the resource; and 4) that Umatilla County co-adopt the City of Umatilla decision. Protection will be achieved by preventing nuisance complaints from being filed by new residential and social gathering uses that may locate within the impact area.

IV. SUMMARY CONCLUSIONS AND STAFF RECOMMENDATION

Therefore, based on the information in Sections I and II of this report and the findings of fact and conclusions contained in Section III, the Planning Commission recommends **APPROVAL** of this request, PA-2-21, to amend the City of Umatilla Comprehensive Plan Goal 5 to include this site as a protected aggregate resource to the City Council. The property is identified as Tax Lot 1700 in Township 5 North, Range 28, Section 16A based on the conditions of approval below.

CONDITIONS OF APPROVAL:

1. Noise will be minimized by completing crushing activities during daylight hours.
2. Impacts from blasting will be minimized by providing notice to sensitive users within the impact area 48 hours prior to blasting. Sensitive users would be residences and medical facilities.
3. Dust will be minimized by using water or other suppressive measures within the quarry and along gravel roads used for ingress and egress.
4. DEQ air quality and stormwater permits will be required as determined by DEQ.
5. All new uses that locate in the impact area shall sign a memorandum of understanding that they are locating near the Powerline Quarry which has potential for conflict. The

memorandum of understanding shall include language stating that the applicant accepts normal mining activity at this significant aggregate site and restricts a landowner's ability to pursue a claim for relief or cause of action alleging injury from the aggregate operation.

Attachments:

1. Assessor's Map 5N 28 16A
2. Notice Map
3. Text Amendment

This map was prepared for Assessment & Taxation purposes only and has not been prepared for legal, engineering or surveying purposes.

NE1/4 Sec 16 T5N R28E WM
UMATILLA COUNTY

SCALE 1"=200'

5N2816A

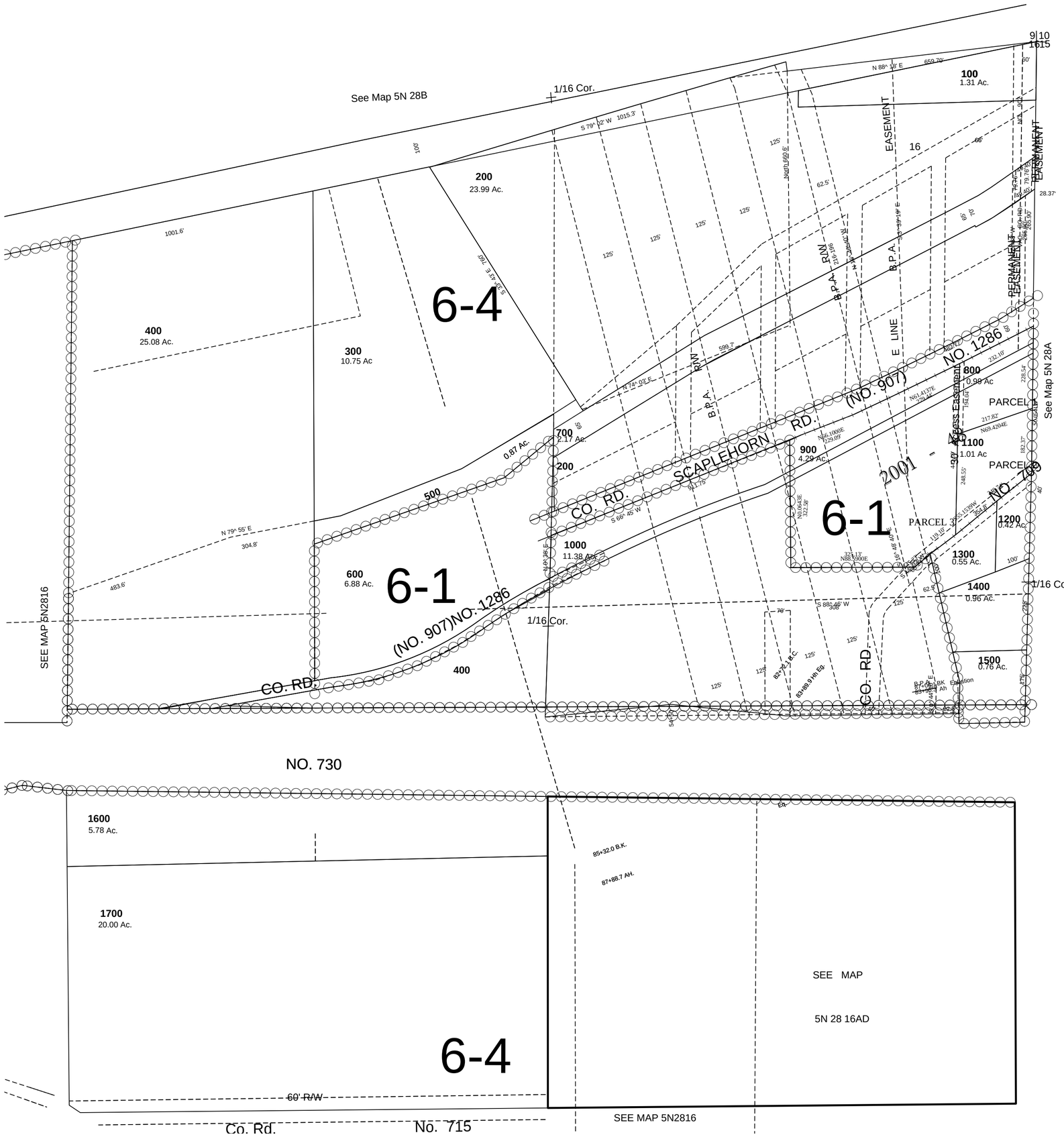

REVISED 4-15-09

5N2816A

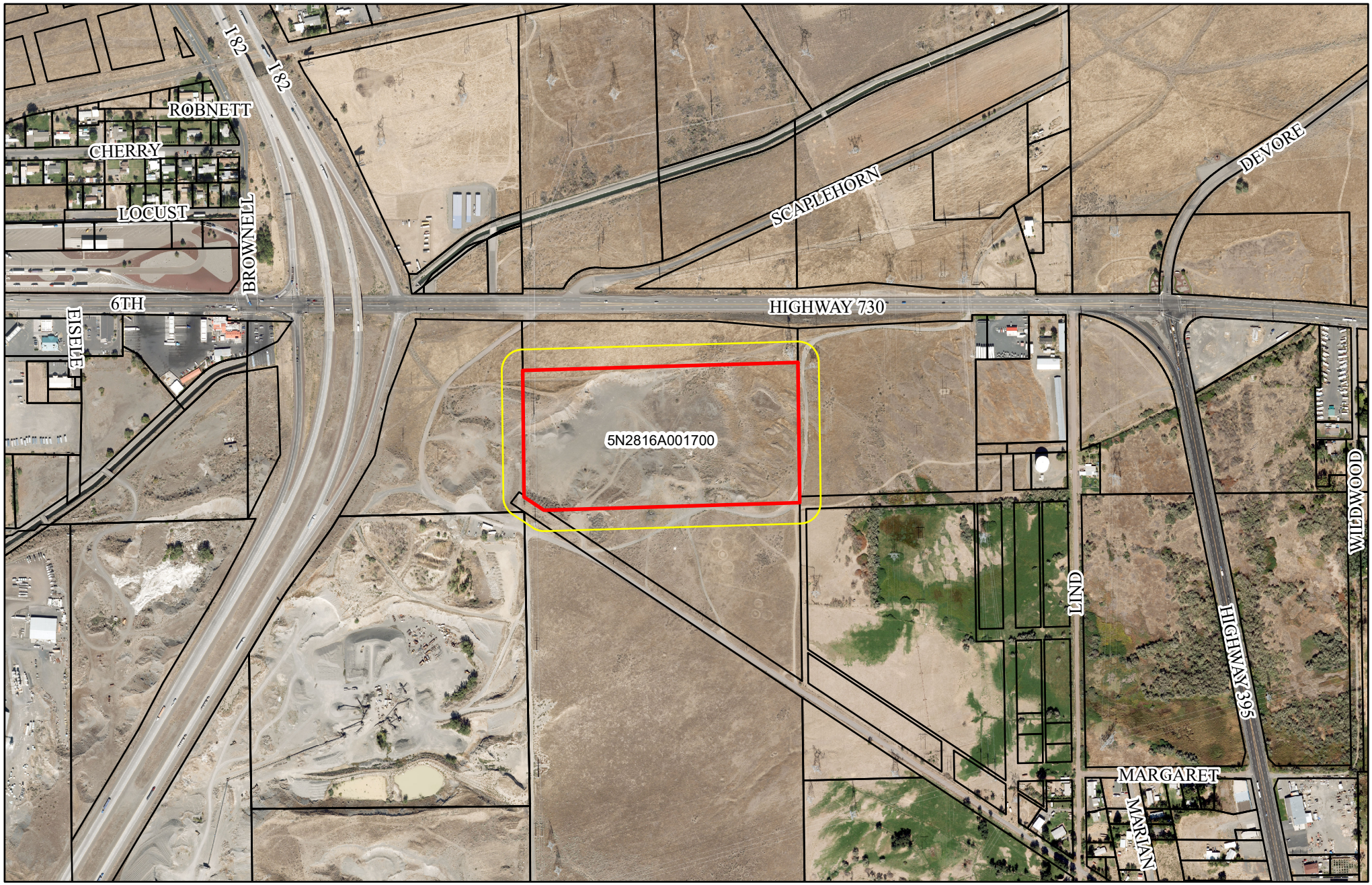

ODOT QUARRY PLAN AMMENDMENT (PA-2-21)

Feet

0 250 500 750 1,000

Legend *NOTICE GIVEN TO PROPERTY OWNERS WITHIN 100' Notice Area

100 foot notice area | Subject Property | Tax Lots (9/28/21)

N W E S

Umatilla Est. 1862

MAP DISCLAIMER: No warranty is made as to the accuracy, reliability or completeness of this data. Map should be used for reference purposes only. Not survey grade or for legal use.
Created by Jacob Foutz, on 11/2/2021

Text Amendment relating to PA-2-21

Text that is not underlined is existing. Test that is underlined is being added.

5.1.300 GRAVEL

Gravel extraction is also an important natural resource feature of the Umatilla area. Most of the areas currently being utilized are situated south of Sharp's Corner. The need for this material will no doubt increase with the advent of I-82 construction and the McNary second powerhouse. These gravel extraction areas have been retained in the Comprehensive Plan and are shown on the Developable Areas map, Figure 5.1-3.

5.1.301 ODOT Powerline Quarry

The City recognizes one site in the City of Umatilla Urban Growth Boundary as being a significant aggregate site. This site is referred to as Powerline Quarry and is identified as Tax Lot 1700 of Assessor's Map 5N2816A. This site is protected as a significant aggregate site as it contains high-quality aggregate and basalt. As such, conflicting uses will be limited within a 1,500-foot impact area by way of a memorandum of understanding in which the applicant acknowledges they are locating within the impact area of a protected use . Conflicting uses shall be considered homes, schools, churches, parks or certain recreation facilities, farm stands, commercial activities such as veterinarians, and other similar uses. The memorandum of understanding shall include language stating that the applicant accepts normal mining activity at this significant aggregate site and restricts a landowner's ability to pursue a claim for relief or cause of action alleging injury from the aggregate operation.

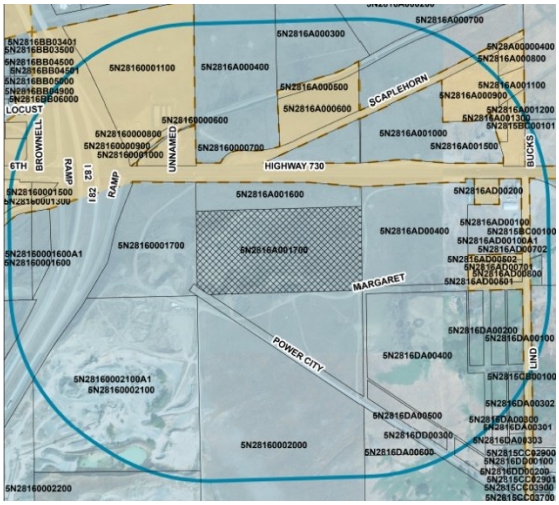

Map Showing 1,500-foot buffer

CITY OF UMATILLA, OREGON

AGENDA BILL

Agenda Title:	**Meeting Date:**
Local Business Grant Award	2021-12-07

Department:	**Director:**	**Contact Person:**	**Phone Number:**
Community Development	Brandon Seitz	Esmeralda Perches	

Cost of Proposal:	**Fund(s) Name and Number(s):**
$126,166.71 **Amount Budgeted:** $225,000.00	General Fund - 01

Reviewed by Finance Department:	**Previously Presented:**
Yes	N/A

Attachments to Agenda Packet Item:

541 Wheels_Redacted.pdf

Acapulco_Redacted.pdf

Alaniz_Redacted.pdf

J&A_Redacted.pdf

KooKee_Redacted.pdf

liteemupgrantapp_Redacted.pdf

Quality Inn_redacted.pdf

Speedwash_Redacted.pdf

Umatilla Chamber_redacted.pdf

Summary Statement:

Below is a summary of the grant applications received for this round of funding for the Local Business Grant program and the amount each business has requested:
541 Wheels - a new business sign. $4,784.25
Acapulco Food Truck - a LED food menu monitor and new tortilla maker. $18,270.69
J & A Group DBA McNary Market - pavement for entirely new parking lot. $27,500
Kookee LLC, DBA Maple Moose Coffee Co - start-up funds for a new coffee shop. $27,500
LiteEm Up BBQ - new commercial equipment. $25,304.03
Umatilla Chamber of Commerce - improvements/equipment for business support. $6,291.75
Umatilla Speedwash - new commercial equipment. $27,500
Alaniz Auto Detail - land acquisition. $27,500
Quality Inn - new drapery. $21,107.55

Staff has reviewed the above applications for completeness, eligibility of grant program funds, and compliance with City Code and other relevant considerations and recommends the following for award *(original request for* reference):

Motion to approve the following applications for award listed below:
541 Wheels - **$618.75** *($4,784.25)*
Acapulco Food Truck - **$18,270.69** *($18,270.69)*
J & A Group - **$27,500** *($27,500)*
Kookee, LLC - **$24,108.24** *($27,500)*
Lite Em Up BBQ - **$25,304.03** *($25,304.03)*
Umatilla Chamber of Commerce - **$2,865** *($6,291.75)*
Umatilla Speedwash - **$27,500** *($27,500)*
Alaniz Auto Detail - **$0** *($27,500)*
Quality Inn - **$0** *($21,107.55)*

Consistent with Council Goals:

Goal 2: Promote Economic Development and Job Growth.

LOCAL BUSINESS GRANT APPLICATION

Date Received: _____

BUILDING/BUSINESS NAME: 541 Wheels and

ADDRESS: 1611 7th Street, Umatilla, OR 97882

Please include the following items to complete your application:

☐Application with Owner Authorization {if the Applicant is not the property owner}
☐Lease Agreement or Letter of Intent to Lease between property owner and tenant
☐" Before" photographs of the property
☐ Any architectural drawings, plans, elevations, or sketches related to this project {for construction projects}
☐Proof of funds needed to complete proposed project
☐Applicants W-9

APPLICANT INFORMATION

Name:	Martin Rocha	Property Address:	1611 7th Street, Umatilla, OR 97882
Mailing Address:	1611 7th Street, Umatilla, Oregon 97882		
Phone:	[redacted]	Email:	[redacted]

PROPERTY OWNER INFORMATION (If different from Applicant)

Name:		Property Address:	
Mailing Address:			
Phone:		Email:	

BUSINESS INFORMATION

Describe the business that occupies or will occupy the improved space. Please include hours of operation and the anticipated hours with the most customers/traffic:

Tire shop/general labor shop

Monday thru Friday 9 am - 5:30 pm
Saturday 10 am - 3 pm

About the Proposed Project

Described the proposed project:

This grant would assist in restoring the appearance of the building.

How does your proposed project help the City accomplish its goals and objectives?

By restoring the appearance of the building it will bring more clients to my business. With a new sign for more visibility and covered work space outside, will make my operation more efficient and customer friendly.

Number of New Jobs Created: _____

What other relevant information would you like to share regarding your project and why it should be funded?

Will you be applying for or have you applied for other City grants? ☐Yes ☒No

If yes, which grant: _____ Amount: _____ When: _____

PROJECT BUDGET (please attach any bids received for this project – if over $10,000)

ACTIVITY	CONTRACTOR/VENDOR	COST ESTIMATE
~~Covered carport work area~~	~~Heavy Metal Carports~~	~~$5554~~
New business sign	High Performance Signs	$825
	TOTAL	$ 6379.00 825.00

How much grant funding are you seeking for this project? (up to 75%): $4784.25 $618.75

Public Information Notice

All information submitted by Applicants shall be public records and subject to disclosure pursuant to the Oregon Public Records Act {ORS 192.410 et seq.}, except such portions for which Applicant requests exception from disclosure consistent with Oregon law. Any portion of a submittal that the Applicant claims constitutes a "trade secret" or is "confidential" must meet the requirements of ORS 192.501(2) and ORS 192.502(4). Applicant must clearly identify such material, by marking it "CONFIDENTIAL," and provide separate notice in writing of the status of this material to the official contact.

Owner Authorization (Only required if Applicant is not the property owner)

I, _____, am the owner of the property located at _____ in Umatilla, Oregon. I hereby give authorization for _____, the Applicant, to alter my building. I do not waive the right to review and approve any proposed project before it commences.

Name of Owner: _____

Signature of Owner: _____ // Date: _____

Statement of Understanding and Certification by Applicant

I, Martin Rocha, {The Applicant} certify that I am authorized to sign on behalf of the Applicant entity. I understand that the City Council must approve the proposed project, with Notice of Award issued in writing, in order to be eligible for reimbursement. Certain changes or modifications may be required by CDD prior to final approval. A Notice of Award will not be issued before the CDD has received the necessary bids for the approved work. Any work started before the Notice of Award is issued may not be eligible for reimbursement. Furthermore, changes to the scope of work must be approved by CDD prior to initiating the work in order for that work to be eligible for reimbursement.

If approved, the applicant hereby authorizes the CDD, and those acting within the City's authority, to use before and after photographed images of this project, both in print and online.

The applicant certifies that all information in this application, and all information furnished in support of this application, is true and complete to the best of the Applicant's knowledge. Verification of any of the information contained in this application may be obtained by staff.

Name of Applicant: Martin Rocha V

Signature of Applicant: Martin Rocha V // Date: 11/15/21

HEAVY METAL CARPORTS LLC

80736 HWY 395 N HERMISTON OR,97838

Carportsruth2021@gmail.com

(541)449-5019

ESTIMATE PRICE

CUSTOMER NAME	PHONE NUMBER	ADDRESS
Martin Rocha	[redacted]	1611 7th st Umatilla OR, 97882

UNIT SIZE	WIDTH: 12 LENGTH: 20 HEIGHT: 7	2,395
FRAME STYLE	ROUND:___ AFRAME HORIZONTAL:___ VERTICAL: X OTHER:___	137
GAUGE	14 X 12___	165
COLOR	TOP:_____ TRIM:_____	80
COLOR SIZE	_____	
COLOR ENDS	_____	
OPTIONS	1 panel on side	

cada uno SUBTOTAL $ 2,777

TAX$ $_____

Por 2 Carports TOTAL $ 5,554

ELECTRICITY AVAILABLE: yes

INTALLATION: CEMENT: X GROUND:___ OTHER:___

DEALER: Office Ruth

DATE: 11 / 12 / 21

CLOSED

12:00 – 12:30 PM FOR LUNCH

OFFICE HOURS: MON-FRI 9:00AM-5:00PM

PRICES ARE SUBJECT TO CHANGE WITHOUT NOTICE.

Martin Rocha 3 days ago
to gary

Thank you, I will let you know.

Hide quoted text

On Fri, Nov 12, 2021, 2:18 PM
<gary@highperformancesigns.net> wrote:

> Martin,
>
> Here is pricing for the sign sizes we discussed.
>
> 4' x 4' Double sided sign on 3mm Dibond.....$500.00
>
> 4' x 4' Double sided sign on 6mm Dibond.....$585.00
>
> 4' x 6' Double sided sign on 3mm Dibond.....$710.00
>
> 4' x 6' Double sided sign on 6mm Dibond.....$825.00

LOCAL BUSINESS GRANT APPLICATION

Date Received: _____

BUILDING/BUSINESS NAME: Acapulco Mexican Food Truck

ADDRESS: 1611 7th St., Umatilla Or., 97882

Please include the following items to complete your application:

☐Application with Owner Authorization {if the Applicant is not the property owner}
☐Lease Agreement or Letter of Intent to Lease between property owner and tenant
☐" Before" photographs of the property
☐ Any architectural drawings, plans, elevations, or sketches related to this project {for construction projects}
☐Proof of funds needed to complete proposed project
☐Applicants W-9

APPLICANT INFORMATION

Name:	MARGARITO CORCUERA	Property Address:	1611 7th St. Umatilla Or. 97882
Mailing Address:	[redacted]		
Phone:	[redacted]	Email:	[redacted]

PROPERTY OWNER INFORMATION (If different from Applicant)

Name:	Martin Rocha	Property Address:	1611 7th St
Mailing Address:			
Phone:	541-922-2327	Email:	541wheels@gmail.com

BUSINESS INFORMATION

Describe the business that occupies or will occupy the improved space. Please include hours of operation and the anticipated hours with the most customers/traffic:

We offer the finest Mexican Food 6 days per week.
Tuesday thru Thursday = 10am to 7 pm
Friday and Saturday = 10 am to 8 pm
Sunday = 10 am to 5 pm

About the Proposed Project

Described the proposed project:

The project is to buy and install a new LED Reader Board sign on the existing Food Truck. This new sign will be 11' wide, and purchase a portable metal "car port" structure.

How does your proposed project help the City accomplish its goals and objectives?

The new LED sign will be more visible to traffic traveling on 6th Street (Hwy 730) and River Road, attracting more customers to the Acapulco Truck.

The new covered structure will provide shade in the summer and weather protection in the winter making the employee experience more enjoyable and safe.

The increase in business could result in the need to hire more employees.

Number of New Jobs Created: _____

What other relevant information would you like to share regarding your project and why it should be funded?

Will you be applying for or have you applied for other City grants? ☐Yes ☐No

If yes, which grant: _____ Amount: _____ When: _____

PROJECT BUDGET (please attach any bids received for this project – if over $10,000)

ACTIVITY	CONTRACTOR/VENDOR	COST ESTIMATE
LED Sign	Stewart Sign Co.	$17,101.00
~~Covered Metal Car Port~~	~~Heavey Metal Carports~~	~~$3605~~
Tortilla Maker	Western Restaurant Supplies	$7,259.91
	TOTAL	$ $20706 $24,360.91

How much grant funding are you seeking for this project? (up to 75%): ~~$15,529.50~~ $18,270.69

Public Information Notice

All information submitted by Applicants shall be public records and subject to disclosure pursuant to the Oregon Public Records Act {ORS 192.410 et seq.}, except such portions for which Applicant requests exception from disclosure consistent with Oregon law. Any portion of a submittal that the Applicant claims constitutes a "trade secret" or is "confidential" must meet the requirements of ORS 192.501(2) and ORS 192.502(4). Applicant must clearly identify such material, by marking it "CONFIDENTIAL," and provide separate notice in writing of the status of this material to the official contact.

Owner Authorization (Only required if Applicant is not the property owner)

I, _____, am the owner of the property located at _____ in Umatilla, Oregon. I hereby give authorization for _____, the Applicant, to alter my building. I do not waive the right to review and approve any proposed project before it commences.

Name of Owner: _____

Signature of Owner: _____ // Date: _____

Statement of Understanding and Certification by Applicant

I, _____, {The Applicant} certify that I am authorized to sign on behalf of the Applicant entity. I understand that the City Council must approve the proposed project, with Notice of Award issued in writing, in order to be eligible for reimbursement. Certain changes or modifications may be required by CDD prior to final approval. A Notice of Award will not be issued before the CDD has received the necessary bids for the approved work. Any work started before the Notice of Award is issued may not be eligible for reimbursement. Furthermore, changes to the scope of work must be approved by CDD prior to initiating the work in order for that work to be eligible for reimbursement.

If approved, the applicant hereby authorizes the CDD, and those acting within the City's authority, to use before and after photographed images of this project, both in print and online.

The applicant certifies that all information in this application, and all information furnished in support of this application, is true and complete to the best of the Applicant's knowledge. Verification of any of the information contained in this application may be obtained by staff.

Name of Applicant: _____

Signature of Applicant: _____ // Date: _____

HEAVY METAL CARPORTS LLC

80736 HWY 395 N HERMISTON OR,97838

Carportsruth2021@gmail.com

(541)449-5019

ESTIMATE PRICE

CUSTOMER NAME	PHONE NUMBER	ADDRESS
Acapulco Tacos	[redacted]	1611 7th st Umatilla OR, 97882

UNIT SIZE	WIDTH: 14 LENGTH: 25 HEIGHT: 12	2,695
FRAME STYLE	ROUND: X AFRAME HORIZONTAL:___ VERTICAL:___ OTHER:___	910
GAUGE	14 X 12___	
COLOR	TOP:_____ TRIM:_____	
COLOR SIZE	_____	
COLOR ENDS	_____	
OPTIONS		

SUBTOTAL $ 3,605

TAX$ $ 0

TOTAL $ 3,605

ELECTRICITY AVAILABLE: yes

INTALLATION: CEMENT:___ GROUND:___ OTHER: gravel

DEALER: Office Ruth

DATE: 11/12/21

CLOSED

12:00 – 12:30 PM FOR LUNCH

OFFICE HOURS: MON-FRI 9:00AM-5:00PM

PRICES ARE SUBJECT TO CHANGE WITHOUT NOTICE.

Stewart Signs
ONE SIGN. ONE COMPANY

Acapulco Mexican Food Truck
1611 7th St
Umatilla, OR 97882

Consultant:
Angela Harrell, x2030
aharrell@stewartsigns.com
Direct Fax:

Customer ID: 3167368
Quote #: 984996 / 1
Quoted: 11/8/2021

DAYSTAR EXP

Attn: Margarito Margarito [redacted]

DESCRIPTION

Daystar EXP Sign:
Single Sided Full Color LED Display, 20mm 32 x 176 Matrix with 3 LEDs per Pixel
Mount: Provided By Customer

Face / Cabinet Details

LED Cabinet Height: 2` 4``
LED Cabinet Width: 11` 10``
EXP Cabinet Assembly for 2 High x 11 Wide 320x 320mm, OR
4 High x 11 Wide 160x 320mm LED Boards

LED Display Specifications

Over 281 Quintillion Colors
SignCommand.com Cloud-Based Software Included FREE for Lifetime of Product. Please visit www.signcommand.com for more information**.
Displays 4 Lines of 5.5" tall characters with approx 29 - 37 characters per line
LED Communication Method: Wireless Data Modem with no restrictions on distance.
Capable of displaying 1 - 4 lines of text
Variable fonts & text sizes up to 25.2" tall

Electrical Information

Circuit Info: One 20 Amp Circuit at 120 Volts, Max Draw: 7 Amps

Structural Details

Mount Style: None
Mount Size:
Minimum Wind Load Rating: 120mph, Exposure B

Miscellaneous Items

Estimated Freight Included

*** Review Custom Artwork for Text, Graphic and Layout Details ***

LED Cabinet: Black

Investment: **$17,101.00**

Unless otherwise noted in Special Instructions, these prices are valid for 30 days. Freight, storage, other freight services, and applicable sales tax will be added to your invoice. Organizations exempt from sales tax must include exempt certificate with order.

Shipping Terms: F.O.B. Origin
Payment Terms: 50% deposit, 50% prior to shipment

***Compliance: FCC Part 15 / UL Listed*
***By purchasing the SignCommand.com product, you are agreeing with the Website Terms of Use (https://www.signcommand.com/terms) and Software End User License Agreement (https://www.signcommand.com/eula).*

WESTERN RESTAURANT SUPPLY & DESIGN
WESTERN FOOD TRUCKS & TRAILERS

Norma Rodriguez *Sales Representative*

norma@westernfoodequipment.com

Office: (866)-585-6978 x 115
Direct: (509)-396-6851
1957 Fowler Street, Richland, WA 99352
www.westernfoodequipment.com

Quote

11/19/2021

To:
Acapulco Food Truck
Margarito Corcuera
[redacted]

Project:
Acapulco Food Truck

From:
Western Equipment Sales LLC
Norma Rodriguez
1957 Fowler Street
Richland, WA 99352
(509)-585-6978
866-585-6978 115 (Contact)

Job Reference Number: 7329

Item	Qty	Description	Sell	Sell Total
1	1 ea	**TORTILLA MACHINE**	$6,625.00	$6,625.00
		Tortilla Masters Equipment Model No. TM105 Ventura Flex Tortilla Machine, countertop, electric, automatic corn tortilla production, top load dough, manual controls, push button stop/start, includes (1) TC16 cutter for 6" tortillas, gear transmission, automatic overload protection, stainless steel construction, 1/30 HP, 115v/60/1-ph, 2.0 amps, NEMA 5-15P, NSF, cETLus		
	1 ea	1 year warranty, standard		
	1 ea	TC14 Tortilla Cutter, 14 cm (raw), 13 cm [5-1/8"] cooked	$357.14	$357.14
			ITEM TOTAL:	**$6,982.14**

Merchandise	$6,982.14
Freight	$277.77
Total	$7,259.91

Acceptance: _____ Date: _____

Printed Name: _____

Project Grand Total: $7,259.91

Initial: _____


Acapulco
Mexican Food
acapulcofoodtruck
acapulcofoodtruck1
541-371-4240


Sanitizing Wipes


MENU
Acapulco
Mexican Food
541-371-4240
acapulcofoodtruck
acapulcofoodtruck1

esmeralda@umatilla-city.org

City of Umatilla

LOCAL BUSINESS GRANT

PROGRAM DETAILS

- Target projects are those that will add considerable new assessed value
- $225,000 total grant funds available in Fiscal Year 2021-2022 {July 1- June 30}
- Maximum grant: $27,500 // Minimum Project Cost: $5,000
  - Additional application/projects per property may be considered, but in a competitive scenario, preferences will be given to properties that have not already received grant funding in the same fiscal year.
- Local Business Grant reimburses up to 75% of the eligible project costs.
- Grant awards are recommended by the Community Development Department and are awarded by the City Council, at their sole discretion. Funds will be provided on a reimbursement basis.
- Grant applications are accepted year-round and are recommended for award to City Council quarterly on the first Tuesday of March/June/Sept/Dec. Applications received after the 15th of Feb/May/Aug/Nov, will be considered in the next quarter. Notice of Recommendation of Award will be provided at least one week prior to going before City Council.
- Approved projects must be completed within one year of formal approval, unless otherwise agreed to in writing.

PROPERTY/APPLICANT ELIGIBILITY

Grants may be awarded to a property owner or business tenant provided there is a signed lease agreement or letter of intent to lease in place between owner and tenant, which must be submitted together with the application, with a duration of at least one year. Additionally, the following criteria must be met:

- Property must be located inside in City limits
- All for-profit and nonprofit organizations are eligible to apply.
  - Priority funding given to for-profit organizations.
  - Priority funding is also given to local and regional businesses over national chains/franchises.

ELIGIBLE PROJECTS

- Acquisition of real property as determined by County Assessor's Real Market Value or bona fide appraisal completed within the previous 12 months. Application must be accompanied by a viable development plan and timeline.
- Design Services (site planning, architectural, etc.)
- Site Prep {environmental, cultural, demolition/excavation/grading, etc.}
- System Development Charge Reduction or Waiver
- Interior Improvements (paint, flooring, fixtures, walls/ceilings,) (*does not include energy improvements*).
- Commercial Equipment (refrigeration, kitchen equipment, office furniture, etc.)
- Façade Improvements (street facing elevations)
- Other improvements as approved by staff/Council as aligned with program goals

PROCESS

1. A pre-application consultation with the Community Development Department (CDD) is recommended, but not required.
2. Identify scope of work and obtain bids as needed.
3. CDD requires at least one bid at the time of application. CDD reserves the right to require additional competitive bids prior to the commencement of any approved work.
4. Complete and return Application with supporting documents.
5. Council determines grant award. If approved, CDD will issue a Notice of Award, which may include funding conditions, with a defined award amount.
6. Obtain additional bids, regulatory approvals, and permits as needed.
7. Contract for approved scope of work.
    - Applicants may complete some onsite work themselves, with CDD approval. However, components of projects requiring building permits must be completed by a licensed and insured contractor. Labor performed by applicant will be considered in-kind match toward the total project cost according to the Federal Independent Sector Volunteer Rate (currently $28.54/hour).
8. Complete final inspection and close permits. Completed work is reviewed by CDD, as necessary.
9. Funds are disbursed to applicant on a reimbursement basis after all funding conditions have been met and paid invoices are submitted and reviewed by CDD.
    - CDD will hold 10% of all project awarded funds until project completion.
    - No more than 3 reimbursement requests per project.

GOALS

Projects should accomplish one or more of the goals listed below. Projects that do not have a clear or direct connection of these goals may be funded at a lower level or not at all.

- Grow taxable/assessed values, especially through new development projects {not required}
- Add pedestrian oriented amenities
- Visually enhance the building and business district
- Convert/create upper-level resident space for occupancy
- Fill commercial space vacancies
- Attract/accommodate new businesses that encourage walkability connections between businesses, especially retail and businesses open after 5:00pm
- Create jobs
- Enhancement or Preservation of existing architectural features

LOCAL BUSINESS GRANT APPLICATION

Date Received: 10/29/21

BUILDING/BUSINESS NAME: Alanis Auto Detail LLC

ADDRESS: 1301 6st Umatilla Oregon (Empty lot adjacent to Alaniz)

Please include the following items to complete your application:

- ☑ Application with Owner Authorization {if the Applicant is not the property owner}
- ☐ Lease Agreement or Letter of Intent to Lease between property owner and tenant
- ☑ " Before" photographs of the property
- ☐ Any architectural drawings, plans, elevations, or sketches related to this project {for construction projects}
- ☑ Proof of funds needed to complete proposed project
- ☑ Applicants W-9

APPLICANT INFORMATION

Name:	Jose Manuel Alanis	Property Address:	1301 6st Umatilla Oregon
Mailing Address:	1301 6st Umatilla		
Phone:	[redacted]		

PROPERTY OWNER INFORMATION (If different from Applicant)

Name:	Jose J. Hernandez	Property Address:	
Mailing	[redacted]		
Phone:			

BUSINESS INFORMATION

Describe the business that occupies or will occupy the improved space. Please include hours of operation and the anticipated hours with the most customers/traffic:

The property will be occupied for overflow parking of Alanis Auto Detail LLC.

Our hours of operation;

Monday - Friday 9am - 6pm
Saturday - 9am - 3pm

About the Proposed Project

Described the proposed project:

Overflow parking and possibly future use to expand for a car dealership.

How does your proposed project help the City accomplish its goals and objectives?

Our project will grow taxable/assessed values, especially through new development projects. It will visually enhance the building and business district. Also, fill commercial space vacancies and create jobs.

Number of New Jobs Created: 2

What other relevant information would you like to share regarding your project and why it should be funded?

It's an empty lot, we have the capacity to bring it up to code. We have also the vision of building a car dealership sometime in the future, to provide more business and jobs to the city of Umatilla.

PUBLIC INFORMATION NOTICE

All information submitted by Applicants shall be public records and subject to disclosure pursuant to the Oregon Public Records Act {ORS 192.410 et seq.}, except such portions for which Applicant requests exception from disclosure consistent with Oregon law. Any portion of a submittal that the Applicant claims constitutes a "trade secret" or is "confidential" must meet the requirements of ORS 192.501(2) and ORS 192.502(4). Applicant must clearly identify such material, by marking it "CONFIDENTIAL," and provide separate notice in writing of the status of this material to the official contact.

OWNER AUTHORIZATION (Only required if Applicant is not the property owner)

I, Jose J. Hernandez, am the owner of the property located at _____ in Umatilla, Oregon. I hereby give authorization for Purchase, the Applicant, to alter my building. I do not waive the right to review and approve any proposed project before it commences.

Name of Owner: Jose de Jesus Hernandez Valencia

Signature of Owner: _____ // Date: 10/28/21

STATEMENT OF UNDERSTANDING AND CERTIFICATION BY APPLICANT

I, Jose Manuel Alanis, {The Applicant} certify that I am authorized to sign on behalf of the Applicant entity. I understand that the City Council must approve the proposed project, with Notice of Award issued in writing, in order to be eligible for reimbursement. Certain changes or modifications may be required by CDD prior to final approval. A Notice of Award will not be issued before the CDD has received the necessary bids for the approved work. Any work started before the Notice of Award is issued may not be eligible for reimbursement. Furthermore, changes to the scope of work must be approved by CDD prior to initiating the work in order for that work to be eligible for reimbursement.

If approved, the applicant hereby authorizes the CDD, and those acting within the City's authority, to use before and after photographed images of this project, both in print and online.

The applicant certifies that all information in this application, and all information furnished in support of this application, is true and complete to the best of the Applicant's knowledge. Verification of any of the information contained in this application may be obtained by staff.

Name of Applicant: Jose Manuel Alanis

Signature of Applicant: Jose Manuel Alanis // Date: 10-28-21

Will you be applying for or have you applied for other City grants? ☐Yes ☐No

If yes, which grant: _____ Amount: _____ When: _____

PROJECT BUDGET (please attach any bids received for this project – if over $10,000)

ACTIVITY	CONTRACTOR/VENDOR	COST ESTIMATE
Land Acquisition	Jose Hernandez	35,000
Closing Cost		2000
	TOTAL	$ 37000

How much grant funding are you seeking for this project? (up to 75%): 27,500

I, Jose de Jesus Hernadez agree to sell the property to Jose Manuel Manis for $35,000 located in _____ this offer is valid for 60 days.

Owner Signature

Jose Manuel Manis
Buyer Signature

Date: 10/28/21

Date: 10-28-21

LOCAL BUSINESS GRANT APPLICATION

Date Received: 11/15/21

BUILDING/BUSINESS NAME: JHA GROUPS LLC

ADDRESS: 205 WILLAMETTE AVE UMATILLA OR 97882

Please include the following items to complete your application:

☐Application with Owner Authorization {if the Applicant is not the property owner}

☐Lease Agreement or Letter of Intent to Lease between property owner and tenant

☒"Before" photographs of the property

☒Any architectural drawings, plans, elevations, or sketches related to this project {for construction projects}

☐Proof of funds needed to complete proposed project

☒Applicants W-9

APPLICANT INFORMATION

Name:	RAJVINDER SANDHU	Property Address:	205 WILLAMETTE
Mailing Address:	[redacted]		
Phone:	[redacted]	Email:	[redacted]

PROPERTY OWNER INFORMATION (If different from Applicant)

Name:		Property Address:	
Mailing Address:			
Phone:		Email:	

BUSINESS INFORMATION

Describe the business that occupies or will occupy the improved space. Please include hours of operation and the anticipated hours with the most customers/traffic:

Convinence store & gas station.
Hours of operation:

About the Proposed Project

Described the proposed project:

Paving of the entire parking lot.

How does your proposed project help the City accomplish its goals and objectives?

It continues to bring business to our community.

Number of New Jobs Created: 4-5

What other relevant information would you like to share regarding your project and why it should be funded?

Will you be applying for or have you applied for other City grants? ☐Yes ☒No

If yes, which grant: _____ Amount: _____ When: _____

PROJECT BUDGET (please attach any bids received for this project – if over $10,000)

ACTIVITY	CONTRACTOR/VENDOR	COST ESTIMATE
Paving Parking "Asphalt Paving"	LCR Construction, LLC	91,552.04
	TOTAL	$ 91,552.04

How much grant funding are you seeking for this project? (up to 75%): 27,500

PUBLIC INFORMATION NOTICE

All information submitted by Applicants shall be public records and subject to disclosure pursuant to the Oregon Public Records Act {ORS 192.410 et seq.}, except such portions for which Applicant requests exception from disclosure consistent with Oregon law. Any portion of a submittal that the Applicant claims constitutes a "trade secret" or is "confidential" must meet the requirements of ORS 192.501(2) and ORS 192.502(4). Applicant must clearly identify such material, by marking it "CONFIDENTIAL," and provide separate notice in writing of the status of this material to the official contact.

OWNER AUTHORIZATION (Only required if Applicant is not the property owner)

I, _____, am the owner of the property located at _____ in Umatilla, Oregon. I hereby give authorization for _____, the Applicant, to alter my building. I do not waive the right to review and approve any proposed project before it commences.

Name of Owner: RAJVINDER SANDHU

Signature of Owner: Rajvinder Sandhu // Date: 11/15/21

STATEMENT OF UNDERSTANDING AND CERTIFICATION BY APPLICANT

I, _____, {The Applicant} certify that I am authorized to sign on behalf of the Applicant entity. I understand that the City Council must approve the proposed project, with Notice of Award issued in writing, in order to be eligible for reimbursement. Certain changes or modifications may be required by CDD prior to final approval. A Notice of Award will not be issued before the CDD has received the necessary bids for the approved work. Any work started before the Notice of Award is issued may not be eligible for reimbursement. Furthermore, changes to the scope of work must be approved by CDD prior to initiating the work in order for that work to be eligible for reimbursement.

If approved, the applicant hereby authorizes the CDD, and those acting within the City's authority, to use before and after photographed images of this project, both in print and online.

The applicant certifies that all information in this application, and all information furnished in support of this application, is true and complete to the best of the Applicant's knowledge. Verification of any of the information contained in this application may be obtained by staff.

Name of Applicant: RAJVINDER SANDHU

Signature of Applicant: Rajvinder Sandhu // Date: 11/15/21

Form **W-9**
(Rev. October 2018)
Department of the Treasury
Internal Revenue Service

Request for Taxpayer Identification Number and Certification

▶ Go to *www.irs.gov/FormW9* for instructions and the latest information.

Give Form to the requester. Do not send to the IRS.

Print or type. See Specific Instructions on page 3.

1 Name (as shown on your income tax return). Name is required on this line; do not leave this line blank.
RAJWINDER SANDHU

2 Business name/disregarded entity name, if different from above
J+A GROUPS LLC

3 Check appropriate box for federal tax classification of the person whose name is entered on line 1. Check only **one** of the following seven boxes.

☐ Individual/sole proprietor or single-member LLC ☐ C Corporation ☐ S Corporation ☐ Partnership ☐ Trust/estate

☒ Limited liability company. Enter the tax classification (C=C corporation, S=S corporation, P=Partnership) ▶

Note: Check the appropriate box in the line above for the tax classification of the single-member owner. Do not check LLC if the LLC is classified as a single-member LLC that is disregarded from the owner unless the owner of the LLC is another LLC that is **not** disregarded from the owner for U.S. federal tax purposes. Otherwise, a single-member LLC that is disregarded from the owner should check the appropriate box for the tax classification of its owner.

☐ Other (see instructions) ▶

4 Exemptions (codes apply only to certain entities, not individuals; see instructions on page 3):

Exempt payee code (if any)

Exemption from FATCA reporting code (if any)

(Applies to accounts maintained outside the U.S.)

5 [redacted]

6 [redacted]

7 [redacted]

Requester's name and address (optional)

Part I Taxpayer Identification Number (TIN)

Enter your TIN in the appropriate box. The TIN provided must match the name given on line 1 to avoid backup withholding. For individuals, this is generally your social security number (SSN). However, for a resident alien, sole proprietor, or disregarded entity, see the instructions for Part I, later. For other entities, it is your employer identification number (EIN). If you do not have a number, see *How to get a TIN*, later.

Note: If the account is in more than one name, see the instructions for line 1. Also see *What Name and Number To Give the Requester* for guidelines on whose number to enter.

Social security number
☐☐☐ - ☐☐ - ☐☐☐☐

or

Employer identification number
[redacted]

Part II Certification

Under penalties of perjury, I certify that:

1. The number shown on this form is my correct taxpayer identification number (or I am waiting for a number to be issued to me); and
2. I am not subject to backup withholding because: (a) I am exempt from backup withholding, or (b) I have not been notified by the Internal Revenue Service (IRS) that I am subject to backup withholding as a result of a failure to report all interest or dividends, or (c) the IRS has notified me that I am no longer subject to backup withholding; and
3. I am a U.S. citizen or other U.S. person (defined below); and
4. The FATCA code(s) entered on this form (if any) indicating that I am exempt from FATCA reporting is correct.

Certification instructions. You must cross out item 2 above if you have been notified by the IRS that you are currently subject to backup withholding because you have failed to report all interest and dividends on your tax return. For real estate transactions, item 2 does not apply. For mortgage interest paid, acquisition or abandonment of secured property, cancellation of debt, contributions to an individual retirement arrangement (IRA), and generally, payments other than interest and dividends, you are not required to sign the certification, but you must provide your correct TIN. See the instructions for Part II, later.

Sign Here **Signature of U.S. person ▶** Rajwinder Sandhu **Date ▶** 11/15/21

General Instructions

Section references are to the Internal Revenue Code unless otherwise noted.

Future developments. For the latest information about developments related to Form W-9 and its instructions, such as legislation enacted after they were published, go to *www.irs.gov/FormW9*.

Purpose of Form

An individual or entity (Form W-9 requester) who is required to file an information return with the IRS must obtain your correct taxpayer identification number (TIN) which may be your social security number (SSN), individual taxpayer identification number (ITIN), adoption taxpayer identification number (ATIN), or employer identification number (EIN), to report on an information return the amount paid to you, or other amount reportable on an information return. Examples of information returns include, but are not limited to, the following.

- Form 1099-INT (interest earned or paid)
- Form 1099-DIV (dividends, including those from stocks or mutual funds)
- Form 1099-MISC (various types of income, prizes, awards, or gross proceeds)
- Form 1099-B (stock or mutual fund sales and certain other transactions by brokers)
- Form 1099-S (proceeds from real estate transactions)
- Form 1099-K (merchant card and third party network transactions)
- Form 1098 (home mortgage interest), 1098-E (student loan interest), 1098-T (tuition)
- Form 1099-C (canceled debt)
- Form 1099-A (acquisition or abandonment of secured property)

Use Form W-9 only if you are a U.S. person (including a resident alien), to provide your correct TIN.

If you do not return Form W-9 to the requester with a TIN, you might be subject to backup withholding. See What is backup withholding, *later.*

LCR Construction, LLC
2524 Robertson Dr.
Richland, WA 99354

Proposal

LCR Construction, LLC

[redacted]

Proposal: 070421
Date:

To:	**Project:**
Customer Attn: Customer	McNary Fuel Station Umatilla, OR

Salesperson		
Lee Petty		

Reference	Description	Quantity	UOM	Unit Price	Extended Price
	Rock excavation will be on a T&M Basis -Rock breakers billed out @ $345 per hour/ Dump Truck @ $165 per hour and any dump fees get 15% added to invoice. If any water is encounter that will be on t&M with price determined later. Owner will supply ~~all rock~~ ONLY except under asphalt. LCR will place rock for $6.50 per ton under concrete areas. Owner will provide all striping and parking lot markings/ bumpers as well as ALL Fuel material. Billing will be once a month paid net 10 days from invoice. If not paid a 12% fee is added past 30 days. Any change is work has a 15% added fee applied to it.				
Total 01 Design & general conditions	The Only rock owner will provide, is the one which is going under the tank slab & drive slab, 6' high only.				
02 Site & Utilities					
01.90.12	Fuel	1.0000	LS	1,428.0000	1,428.00
02.01.01	Erosion Control	1.0000	EA	8,085.5500	8,005.55
02.01.05	Sawcut asphalt	320.0000	LF	4.1650	1,332.80
02.10.01	Remove asphalt 26,400 sf, concrete 900sf, bollards14 ea	1.0000	LS	25,680.2000	25,680.20
02.50.01	Grade site	800.0000	cy	9.5558	7,644.65
02.60.04	Stormdrain, CB's O/W	1.0000	LS	28,274.4000	28,274.40
02.80.02	6" top course under concrete "Owner provided"				
02.80.03	Asphalt Paving- 3"	20,710.0000	SF	4.5172	91,552.04
02.90.01	Striping and HC signage	0.0000	LS		
03.01.20	Concrete curb	300.0000	LF	21.4200	6,426.00
16.01	Trench for electrical	250.0000	LF	8.3301	2,082.52
16.01.01	Electrical	1.0000	LS	77,350.0000	77,350.00
Total 02 Site & Utilities					**249,856.15**
03 Fuel System					
02.70.01	Dig and backfill footings- canopy	80.0000	cy	105.9825	8,478.60
03.05.02	Concrete- alternate for parking	2,060.0000	SF	11.8468	9,305.43
03.98.21	Concrete- 25' x 102" drive slab, 25' x 46' tank slab	3,700.0000	SF	11.8468	43,833.28
03.98.23	Canopy footings	32.0000	CY	665.4647	21,294.87
11.10.01	Underground tank install- set backfill	1.0000	LS	163,922.5000	163,922.50
11.12.01	Fuel system labor to install	1.0000	LS	53,907.0000	53,907.00
11.12.02	Canopies, 25' x 102'	1.0000	LS	112,455.0000	112,455.00
11.80.12	Startup- fuel system	1.0000	LS	2,975.0000	2,975.00
Total 03 Fuel System					**416,168.68**

LCR Construction, LLC
2524 Robertson Dr.
Richland, WA 99354

Proposal

LCR Construction, LLC

[redacted]

Proposal: 070421
Date:7-15-21

To:	**Project:**
Customer Attn: Customer	McNary Fuel Station Umatilla, OR

Salesperson		
Lee Petty		

Proposal Total:	**665,944.83**

Acceptance	
Accepted by:	[signature]
Title:	Owner
Date:	07-19-21

☆ NOTE: Owner waiting for the bid from other company for the asphalt, looking for the better price.

GENERAL NOTES

GENERAL NOTES

1. ALL CONSTRUCTION SHALL BE IN ACCORDANCE WITH THE 2019 EDITION OF THE OREGON STRUCTURAL SPECIALTY CODE, CITY STANDARDS AND SPECIFICATIONS, LOCAL RULES AND STANDARDS OF GOVERNING AGENCIES HAVING JURISDICTION.
2. PRIOR TO DIGGING VERIFY LOCATION AND DEPTH OF UTILITIES AND ANY OTHER UNDERGROUND INTERFERENCE. CALL TWO BUSINESS DAYS BEFORE YOU DIG AT 811.
3. STATEMENT OF ERRORS, AMBIGUITIES AND OMISSIONS: ANY ERRORS, AMBIGUITIES, AND OMISSION IN DRAWINGS AND/OR SPECIFICATIONS SHALL BE REPORTED TO KNUTZEN ENGINEERING FOR CORRECTION BEFORE ANY PART OF THE WORK IS STARTED. UNLESS EXPRESSLY STIPULATED NO ADDITIONAL ALLOWANCE WILL BE MADE IN THE CONTRACTOR AND/OR MANUFACTURE'S FAVOR BY VIRTUE OF ERRORS, AMBIGUITIES, AND/OR OMISSIONS WHICH SHOULD HAVE BEEN DISCOVERED DURING THE PREPARATION OF BID ESTIMATE AND DIRECTED TO THE ATTENTION OF KNUTZEN ENGINEERING IN A TIMELY MANNER. KNUTZEN ENGINEERING ACCEPTS NO RESPONSIBILITY FOR WORK DONE BY THE CONTRACTOR OR SUBCONTRACTORS CONTRARY TO THE PLANS OR SPECIFICATIONS. SUBSTITUTION OR CHANGES WILL NOT BE ACCEPTED UNLESS APPROVED IN WRITING. THE SUBCONTRACTOR SHALL REVIEW ALL SECTIONS OF SPECIFICATIONS AND ALL SHEETS OF THE PLANS FOR ANY INFORMATION OR DETAILS PERTAINING TO THEIR SPECIFIC TRADE.
4. CONTRACTOR IS RESPONSIBLE FOR VERIFICATION OF SITE CONDITIONS, INSTALLATION STANDARDS AND CONSTRUCTION CONDITIONS. CONTRACTOR SHALL FIELD VERIFY ALL DIMENSIONS PRIOR TO SHOP FABRICATION AND/OR FIELD ERECTION. DISCREPANCIES BETWEEN SITE CONDITIONS AND THE CONSTRUCTION DRAWINGS SHALL BE CALLED TO THE ATTENTION OF THE ENGINEER. WORK DONE WITHOUT THE ENGINEERS APPROVAL IS THE RESPONSIBILITY OF THE CONTRACTOR. LOCATIONS OF EXISTING UTILITIES SHOWN ON THESE DRAWINGS ARE APPROXIMATE ONLY. CONTRACTOR IS FULLY RESPONSIBLE FOR ANY AND ALL DAMAGE WHICH MIGHT OCCUR TO EXISTING UTILITIES.
5. CONTRACTOR IS TO PROVIDE A METHOD OF CONSTRUCTION WHICH WILL ALLOW FOR OWNER TO REMAIN OPERATIONAL THROUGHOUT CONSTRUCTION WITH AS LITTLE DISRUPTION AS POSSIBLE.
6. CONTRACTOR IS TO PROVIDE A METHOD OF CONSTRUCTION OF OFF-SITE WORK THAT WILL ALLOW MINIMAL DISTURBANCE TO TRAFFIC FLOWS ON PUBLIC AND PRIVATE WAYS.
7. ALL SPECIAL INSPECTION AND TESTING SHALL BE PERFORMED BY AN INDEPENDENT INSPECTION AND TESTING AGENCY HIRED BY THE OWNER. CONTRACTOR TO COORDINATE WITH INSPECTION AND TESTING AGENCY FOR REQUIRED CONSTRUCTION INSPECTIONS AND MATERIAL TESTING.
8. HANDICAPPED SIGNS, SYMBOLS, ETC. SHALL BE IN ACCORDANCE WITH THE 2019 ISSUE OF THE OREGON STATE RULES AND REGULATIONS IN CHAPTER 11 OF THE OREGON STRUCTURAL SPECIALTY CODE.
9. THE CONTRACTOR SHALL REFERENCE RECOMMENDATIONS OF THE GEO-TECHNICAL ENGINEERS SOILS REPORT PREPARED BY GN NORTHERN, INC. FOR THE PROJECT SITE. GNN PROJECT NO. 221-1366.

EARTHWORK

1. ALL FILL OR BACKFILL SHALL BE COMPACTED TO 95% OF MAXIMUM DENSITY IN ACCORDANCE WITH ASTM D1557 FOR COHESIVE SOILS, OR 75% OF RELATIVE DENSITY IN ACCORDANCE WITH ASTM D4254 FOR COHESIONLESS SOILS.
2. REMOVE ALL DEBRIS FROM THE AREA TO BE BACKFILLED PRIOR TO BACKFILLING.
3. PLACE LOAD BEARING BACKFILL IN LAYERS NOT MORE THAN 6" THICK, LOOSE MEASUREMENT. SPREAD AND COMPACT EACH LAYER UNIFORMLY TO THE REQUIRED DENSITY.
4. THE CONTRACTOR SHALL BE RESPONSIBLE TO REPLACE IN KIND ANY UTILITIES AND OR IRRIGATION PIPING DISTURBED AND OR DAMAGED DURING THE WORK.
5. THE CONTRACTOR SHALL BE RESPONSIBLE TO REPLACE SOD AND LANDSCAPE FEATURES REMOVED OR DAMAGED DURING THE WORK.
6. ALL EARTHWORK SHALL COMPLY WITH THE GEO-TECHNICAL ENGINEERING SOILS REPORT PREPARED BY GN NORTHERN, INC. FOR THE PROJECT SITE. GNN PROJECT NO. 221-1366.

SITE UTILITIES

1. A PRE-CONSTRUCTION CONFERENCE SHALL BE SCHEDULED WITH THE CONTRACTOR, ENGINEER, ARCHITECT, CITY PERSONNEL, AND ANY AFFECTED UTILITIES PRIOR TO START OF WORK.
2. MAINTAIN A MINIMUM OF 1' HORIZONTAL SEPARATION OF WATER LINE FROM BURIED POWER LINES. MAINTAIN 1' HORIZONTAL SEPARATION OF GAS LINES FROM BURIED POWER LINES.
3. FOR BUILDING SERVICES MAINTAIN A MINIMUM OF 5' HORIZONTAL AND VERTICAL SEPARATION OF WATER SERVICE AND SANITARY SEWER SERVICE LINES. WATER SERVICE SHALL BE PLACED ABOVE SANITARY SEWER SERVICE.
4. MAINTAIN A MINIMUM OF 10' HORIZONTAL AND 1.5' VERTICAL SEPARATION OF WATER AND SANITARY SEWER MAIN LINES. WATER MAINS SHALL BE PLACED ABOVE SANITARY SEWER MAIN.
5. COPPER WATER SERVICE LINE SHALL BE SEAMLESS SOFT TYPE K CONFORMING TO ASTM B88.
6. SANITARY SEWER LINES SHALL BE PLACED WITH A CONSISTENT SLOPE OF 2 PERCENT OR MORE WITH AT LEAST 24" OF COVER ON SITE AND 36" WITHIN ROW, UNLESS NOTED OTHERWISE.
7. SANITARY SEWER PIPE SHALL BE PVC MANUFACTURED TO ASTM D3034-SDR 35 WITH RUBBER GASKETED JOINTS.
8. STORM DRAINAGE PIPE SHALL BE PVC OR CORRUGATED POLYETHYLENE (PE). PVC PIPE SHALL BE MANUFACTURED TO ASTM D3034-SDR 35 WITH RUBBER GASKETED JOINTS. PE PIPE SHALL BE MANUFACTURED TO ASTM F405 AND/OR F667 WITH SMOOTH INTERIOR.
9. ALL BEDDING AND BACKFILL SHALL BE COMPACTED TO 95% OF MAXIMUM DENSITY IN ACCORDANCE WITH ASTM D1557. REMOVE ALL DEBRIS FROM THE AREA TO BE BACKFILLED PRIOR TO BACKFILLING. PLACE BACKFILL IN LAYERS NOT MORE THAN 6" THICK, LOOSE MEASUREMENT. SPREAD AND COMPACT EACH LAYER UNIFORMLY TO THE REQUIRED DENSITY.
10. COSTS FOR GENERAL CONSTRUCTION ITEMS WHICH ARE NOT SHOWN ON THESE DRAWINGS, BUT ARE NECESSARY AND NORMAL FOR COMPLETION OF THIS PROJECT, SHALL BE CONSIDERED INCIDENTAL AND INCLUDED IN THE CONTRACTORS BID FOR THIS PROJECT.

ASPHALT PAVEMENT

1. PRIOR TO BEGINNING WORK, CONTACT THE OWNER/CITY/COUNTY/ OR STATE OFFICIAL TO COORDINATE TRAFFIC FLOW, WORK SCHEDULES AND UTILITY INTERFACES.
2. PAVEMENT MARKINGS SHALL BE IN ACCORDANCE WITH THE CURRENT EDITION OF THE ODOT STANDARD SPECIFICATIONS. CONTRACTOR SHALL USE SOLVENT-BORNE, READY-MIXED TRAFFIC PAINT MEETING AASHTO M248 STANDARDS. PREPARE THE SURFACES, APPLY THE PAINT, AND BE WITHIN THE TOLERANCES AS SPECIFIED IN THE ODOT STANDARD SPECIFICATIONS.
3. WHERE NEW ASPHALT JOINS EXISTING, THE EXISTING ASPHALT SHALL BE CUT TO A VERTICAL EDGE AND TACKED WITH ASPHALT EMULSION TYPE CSS-1. THE NEW ASPHALT SHALL BE FEATHERED BACK OVER THE EXISTING TO SEAL THE JOINT.
4. ASPHALT PAVING MATERIALS AND CONSTRUCTION PRACTICES SHALL BE IN ACCORDANCE WITH SECTION 00745 HOT MIXED ASPHALT CONCRETE, OF THE CURRENT OREGON STANDARD SPECIFICATIONS FOR CONSTRUCTION. ACP SHALL BE LEVEL 2,1/2" DENSE PG 64-28.
5. ALL ASPHALT AND BASE THICKNESSES NOTED ARE COMPACTED THICKNESS.
6. ONE DAY PRIOR TO PLACEMENT OF BITUMINOUS MATERIAL ON THE BASE, THE SURFACE SHALL BE STERILIZED WITH A SOIL HERBICIDE,
7. PAVEMENT SECTIONS SHALL COMPLY WITH THE GEO-TECHNICAL ENGINEERING SOILS REPORT PREPARED BY GN NORTHERN, INC, FOR THE PROJET SITE. GNN PROJECT NO. 221-1366.

FOUNDATIONS

1. FOR SLAB ON GRADE AND FOUNDATION SUBGRADE PREPARATION THE CONTRACTOR SHALL REFERENCE RECOMMENDATIONS OF THE GEO-TECHNICAL ENGINEERS SOILS REPORT.
2. SEE STRUCTURAL DRAWINGS FOR FOUNDATION EXCAVATION REQUIREMENTS. UNLESS NOTED OTHERWISE EXCAVATE FOOTING TRENCHES AND AREA BELOW SLABS TO BOTTOM OF GRAVEL BASE OR FOOTING. COMPACT THE TOP 1'-0 OF SUBGRADE TO 95% OF MAXIMUM DRY DENSITY AS DETERMINED BY ASTM D-1557.

CONCRETE

1. CONCRETE FOR WALKS, CURBS AND GUTTERS SHALL HAVE A MINIMUM COMPRESSIVE STRENGTH OF 3500 PSI AT 28 DAYS.
2. REINFORCEMENT SHALL CONFORM TO ASTM A615, GRADE 60, DEFORMED. FABRICATE REINFORCEMENT PER ACI 318-02, CLASS "B" SPLICES UNLESS NOTED OTHERWISE.
3. WELDED WIRE FABRIC (WWF) SHALL CONFORM TO ASTM A185.
4. TOOL ALL EXPOSED EDGES WITH A CONCAVE TOOLING DEVICE.
5. ALL CONCRETE WORK SHALL BE IN ACCORDANCE WITH ACI 301 AND ACI 305 OR 306 FOR HOT AND COLD WEATHER CONCRETING.
6. TOLERANCES FOR CONCRETE CONSTRUCTION SHALL BE BASED ON A 10'-0 STRAIGHT EDGE. GRADE SHALL NOT DEVIATE MORE THAN 1/8" AND ALIGNMENT SHALL NOT VARY MORE THAN 1/4".
7. CONCRETE SECTIONS SHALL COMPLY WITH THE GEO-TECHNICAL ENGINEERS SOILS REPORT PREPARED BY GN NORTHERN, INC. FOR THE PROJECT SITE. GNN PROJECT NO. 221-1366.

SPECIAL INSPECTION

1. PER OSSC 1705.6, PRIOR TO PLACEMENT OF PREPARED FILL, THE SPECIAL INSPECTOR SHALL DETERMINE THAT THE SITE HAS BEEN PREPARED IN ACCORDANCE WITH THE APPROVED SOILS REPORT.
2. PER OSSC 1705.6, WHERE LOAD BEARING FILL EXCEEDS 12" IN DEPTH, THE SPECIAL INSPECTOR SHALL HAVE CONTINUOUS INSPECTION OF FILL PLACEMENT AND COMPACTION.
3. TESTING AGENCY WILL TEST COMPACTION OF SOILS IN PLACE ACCORDING TO ASTM D 1557, ASTM D 2167, ASTM D 2922, AND ASTM D 2937, AS APPLICABLE. TESTS WILL BE PERFORMED AT THE FOLLOWING LOCATIONS AND FREQUENCIES:
   - A. FOUNDATION, PAVING, AND ADJACENT: AT SUBGRADE AND AT EACH COMPACTED FILL AND BACKFILL LAYER, AT LEAST 3 TESTS FOR EVERY 5,000 SQ. FT. OR LESS OF PAVED AREA OR BUILDING SLAB.
   - B. TRENCH BACKFILL: AT EACH COMPACTED INITIAL AND FINAL BACKFILL LAYER, AT LEAST 3 TESTS FOR EACH 150 FEET OR LESS OF TRENCH LENGTH.
4. COMPACTION TESTING IS REQUIRED AT THE ABOVE SCHEDULE UNLESS GREATER TESTING IS RECOMMENDED BY STRUCTURAL DRAWINGS. LESS TESTING WOULD BE ACCEPTABLE IF APPROVED IN WRITING BY GEOTECHNICAL ENGINEER, SPECIAL INSPECTOR, FOUNDATION ENGINEER, AND KNUTZEN ENGINEERING.

EROSION CONTROL

1. PROVIDE TEMPORARY EROSION AND SEDIMENTATION CONTROL MEASURES IN ACCORDANCE WITH THE 2019 EDITION OF THE ODOT STANDARD SPECIFICATIONS AND ROADWAY DRAWINGS TO PREVENT SOIL EROSION AND DISCHARGE OF SOIL-BEARING WATER RUNOFF OR AIRBORNE DUST TO ADJACENT PROPERTIES AND WALKWAYS ACCORDING TO REQUIREMENTS OF AUTHORITIES HAVING JURISDICTION.
2. ESTABLISH CONSTRUCTION ACCESS.
   - A. CONSTRUCTION VEHICLE ACCESS AND EXIT SHALL BE LIMITED TO ONLY NECESSARY LOCATIONS AND SHALL BE IN ACCORDANCE WITH ODOT STANDARD ROADWAY DRAWING RD1000. ACCESS POINTS SHALL BE STABILIZED WITH QUARRY SPALL OR CRUSHED ROCK TO MINIMIZE THE TRACKING OF SEDIMENT ONTO PUBLIC ROADS.
   - B. WHEEL WASH OR TIRE BATHS SHOULD BE LOCATED ON-SITE, IF NEEDED TO PREVENT EXCESSIVE TRACKING OF SEDIMENT ON ROADS AND SHALL BE IN ACCORDANCE WITH ODOT STANDARD ROADWAY DRAWING RD1060.
   - C. PUBLIC ROADS SHALL BE CLEANED THOROUGHLY AT THE END OF EACH DAY. SEDIMENT SHALL BE REMOVED FROM ROADS BY SHOVELING OR PICKUP SWEEPING AND SHALL BE TRANSPORTED TO A CONTROLLED SEDIMENT DISPOSAL AREA. STREET WASHING WILL BE ALLOWED ONLY AFTER SEDIMENT IS REMOVED IN THIS MANNER.
   - D. STREET WASH WASTEWATER SHALL BE CONTROLLED BY PUMPING BACK ON-SITE, OR OTHERWISE BE PREVENTED FROM DISCHARGING INTO SYSTEMS TRIBUTARY TO STATE SURFACE WATERS.
   - E. A SEPARATION GEOTEXTILE SHALL BE PLACED UNDER THE SPALLS TO PREVENT FINE SEDIMENT FROM PUMPING UP INTO THE ROCK PAD. THE GEOTEXTILE SHALL MEET THE FOLLOWING STANDARDS:

I. GRAB TENSILE STRENGTH (ASTM D4632) 200 PSI MINIMUM.

II. GRAB TENSILE ELONGATION (ASTM D4632) 30% MAXIMUM.

III. MULLEN BURST STRENGTH (ASTM D3786-80A) 400 PSI MINIMUM.

IV. AOS (ASTM D4751) 20 TO 45 (US STANDARD SIEVE SIZE).

   - F. CONSIDER EARLY INSTALLATION OF THE FIRST LIFT OF ASPHALT IN AREAS THAT WILL BE PAVED; THIS CAN BE USED AS A STABILIZED ENTRANCE. ALSO CONSIDER THE INSTALLATION OF EXCESS CONCRETE AS A STABILIZED ENTRANCE. DURING LARGE CONCRETE POURS, EXCESS CONCRETE IS OFTEN AVAILABLE FOR THIS PURPOSE.
   - G. WHENEVER POSSIBLE, THE ENTRANCE SHALL BE CONSTRUCTED ON A FIRM, COMPACTED SUBGRADE. THIS CAN SUBSTANTIALLY INCREASE THE EFFECTIVENESS OF THE PAD AND REDUCE THE NEED FOR MAINTENANCE.
   - H. QUARRY SPALLS SHALL BE ADDED IF THE PAD IS NO LONGER IN ACCORDANCE WITH THE SPECIFICATIONS.
   - I. IF THE ENTRANCE IS NOT PREVENTING SEDIMENT FROM BEING TRACKED ONTO PAVEMENT, THEN ALTERNATIVE MEASURES TO KEEP THE STREETS FREE OF SEDIMENT SHALL BE USED. THIS MAY INCLUDE STREET SWEEPING, AN INCREASE IN THE DIMENSIONS OF THE ENTRANCE, OR THE INSTALLATION OF A WHEEL WASH.
   - J. ANY QUARRY SPALLS THAT ARE LOOSENED FROM THE PAD, WHICH END UP ON THE ROADWAY, SHALL BE REMOVED IMMEDIATELY.
   - K. UNTIL PROJECT COMPLETION AND SITE STABILIZATION, ALL CONSTRUCTION ACCESSES INTENDED AS PERMANENT ACCESS FOR MAINTENANCE SHALL BE PERMANENTLY STABILIZED.
3. CONTRACTOR SHALL INSTALL AND MAINTAIN TEMPORARY SILT FENCING IN ACCORDANCE WITH ODOT STANDARD ROADWAY DRAWING RD1040 TO PREVENT ANY WATER RUNOFF FROM ANY DISTURBED AREAS. AT A MINIMUM, SILT FENCE WILL BE ALONG THE DOWN SLOPE PROPERTY LINES. THE SILT FENCES SHALL BE CONSTRUCTED IN THE AREAS OF CLEARING, GRADING, OR DRAINAGE PRIOR TO STARTING THOSE ACTIVITIES. THE SILT FENCE SHALL PREVENT SOIL CARRIED BY RUNOFF WATER FROM GOING BENEATH, THROUGH, OR OVER THE TOP OF THE SILT FENCE, BUT SHALL ALLOW THE WATER TO PASS THROUGH THE FENCE.
4. INSPECT, REPAIR, AND MAINTAIN EROSION AND SEDIMENTATION CONTROL MEASURES DURING CONSTRUCTION UNTIL PERMANENT VEGETATION HAS BEEN ESTABLISHED.
5. REMOVE EROSION AND SEDIMENTATION CONTROLS ONCE THEY ARE NO LONGER NEEDED AND RESTORE AND STABILIZE AREAS DISTURBED DURING REMOVAL.

STORMWATER NOTES

1. SEE THE GEO-TECHNICAL ENGINEERS SOILS REPORT PREPARED BY GN NORTHERN, INC. FOR SITE GEOLOGY AND WATER TABLE. GNN PROJECT NO. 221-1366.
2. REFER TO STORM REPORT PREPARED BY KNUTZEN ENGINEERING FOR STORM DESIGN CRITERIA.

STORMWATER SYSTEM OPERATION AND MAINTENANCE

1. CATCH BASINS
   - A. REMOVE SEDIMENT, TRASH AND DEBRIS WHEN GRATE BECOMES CLOGGED MORE THAN 10%.
   - B. REMOVE SEDIMENT, TRASH AND DEBRIS IN SUMP THAT EXCEEDS 60% OF SUMP DEPTH AS MEASURED FROM BOTTOM OF BASIN TO INVERT OF LOWEST PIPE, BUT IN NO CASE SHALL THE CLEARANCE FROM TOP OF DEBRIS TO INVERT OF LOWEST PIPE BE LESS THAN 6". NO VEGETATION SHALL BE ALLOWED TO GROW IN SUMP. AT A MINIMUM, REMOVE SEDIMENT, TRASH AND DEBRIS IN SUMP ANNUALLY.
   - C. STRUCTURAL DAMAGE TO FRAME, GRATE, TOP SLAB, OR SUMP, SHALL BE REPAIRED OR REPLACED. STRUCTURAL DAMAGE INCLUDES CRACKS GREATER THAN 1/4" OR HOLES GREATER THAN 2" IN TOP SLAB, FRAME NOT SITTING FLUSH ON TOP SLAB (MORE THAN 3/4" SEPARATION) OR NOT SECURELY ATTACHED, CRACKS GREATER THAN 1/4" IN SUMP WALLS, SOIL ENTERING SUMP, CRACKS AT GROUT FILLET AROUND PIPES IN EXCESS OF 1/2", SETTLEMENT OF ENTIRE BASIN SUCH THAT IT CREATES A SAFETY, FUNCTION OR DESIGN PROBLEM.
   - D. REPLACE ANY MISSING GRATE OR REPAIR IF GRATE IS DIFFICULT TO REMOVE. REPLACE GRATE IF OPENINGS GREATER THAN 7/8" OR GRATE HAS MISSING OR BROKEN BARS.
2. INFILTRATION SWALE
   - A. REMOVE TRASH AND DEBRIS AT LEAST 2 TIMES PER YEAR AND WHEN ACCUMULATION EXCEEDS 1 CUBIC FOOT PER 1000 SQUARE FOOT OF POND.
   - B. REMOVE SEDIMENT ACCUMULATIONS IN POND IN EXCESS OF 2" AND AT LEAST ONCE PER YEAR.
   - C. IF EROSION OR SETTLEMENT OF POND SIDE SLOPES OCCURS, REPAIR TO MATCH ORIGINAL DESIGN CONDITIONS. IF POND SIDE SLOPES CONTINUE TO SETTLE, CONSULT A REGISTERED ENGINEER SINCE THIS COULD INDICATE A SEVERE UNDERLYING PROBLEM.
   - D. TREES ARE NOT ALLOWED IN POND AREAS INCLUDING POND SIDE SLOPES. IF POOR VEGETATION COVER OCCURS OVER GREATER THAN 10% OF POND AREA, REPLACE VEGETATION AND DETERMINE WHY. CUT VEGETATION SUCH THAT IT DOES NOT EXCEED 10"
   - E. IF RODENT HOLES OCCUR OR IF ANY EVIDENCE OF WATER PIPING OCCURS, REMOVE RODENTS AND COMPLETELY FILL VOIDS WITH BENTONITE CLAY, LEAN MIX CONCRETE, OR CONSOLIDATED DENSITY FILL.
   - F. IF WATER REMAINS MORE THAN 72 HOURS AFTER CESSATION OF RAINFALL, A PERCOLATION TEST MUST DONE AND A REGISTERED ENGINEER CONSULTED.

VICINITY MAP

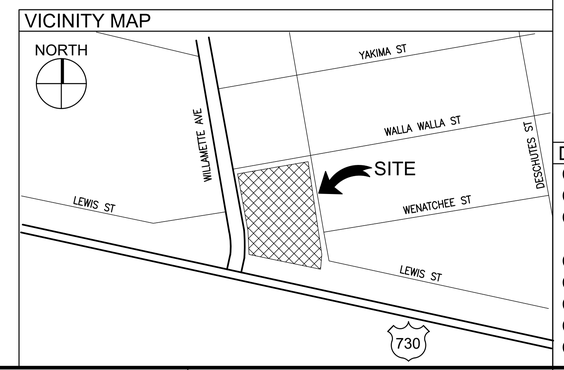

LEGEND AND ABBREVIATIONS

NEW	EXISTING	
		ACCESSIBLE PARKING MARKER
AVR	(E)AVR	AIR VAC RELIEF
AD	(E)AD	AREA DRAIN
GUY	(E)GUY	GUY WIRE
BOA	(E)BOA	BLOW OFF ASSEMBLY
BO	(E)BO	BOLLARD
		CAP
CB	(E)CB	CATCH BASIN ROUND/SQUARE
CB		CATCH BASIN SOLID
CO	(E)CO	CLEAN OUT
CDS	(E)CDS	CONTINUOUS DEFLECTIVE SEPARATION UNIT
DS	(E)DS	DOWN SPOUT
DW	(E)DW	DRY WELL
EM	(E)EM	ELECTRICAL METER
EV	(E)EV	ELECTRICAL VAULT
GM	(E)GM	GAS METER
FDC	(E)FDC	FIRE DEPARTMENT CONNECTION
FH	(E)FH	FIRE HYDRANT
FP	(E)FP	FLAG POLE
IV	(E)IV	IRRIGATION VALVE
LP	(E)LP	LIGHT POLE
SD SS MH	(E)SD (E)SS (E)MH	MANHOLE
		PAVEMENT ARROWS
PIV	(E)PIV	POST INDICATOR VALVE
PP	(E)PP	POWER POLE
		REDUCER
		SHRUB
SB	(E)SB	SLOPE DIRECTION/PIPE SLOPE
SIGN	(E)SIGN	STORM BUBBLER
SL	(E)SL	STREET SIGN
TP	(E)TP	STREET LIGHT
		TELEPHONE PEDESTAL
		THRUST BLOCK
XFMR	(E)XFMR	TRANSFORMER
		TREE
T C P J	T C P J	UTILITY BOX
VAN		VAN PAVEMENT MARKING
WV	(E)WV	WATER VALVE
WM/IM	(E)WM/IM	WATER/IRRIGATION METER
WP	MON	WORK/MONUMENT POINT
		YARD HYDRANT
NEW ASPHALT	EXISTING ASPHALT	
NEW HEAVY ASPHALT	EXISTING CONCRETE	
NEW HEAVY CONCRETE	EXISTING GRAVEL	
NEW CONCRETE	EXISTING LAWN	
NEW GRAVEL	EXISTING LANDSCAPE	
NEW LAWN	EXISTING UNDEVELOPED	
NEW LANDSCAPE	REMOVE LANDSCAPE	
NEW PLAY ASPHALT	REMOVE ASPHALT	
NEW NATIVE	REMOVE CONCRETE	
NEW TRUNCATED DOMES	REMOVE GRAVEL	
NEW RIP RAP	REMOVE LAWN	
ABAND ABANDONED	REMOVE UNDEVELOPED	

BOT	BOTTOM	PDP	PERFORATED DRAIN PIPE
BW	BOTTOM OF WALL ELEVATION	PE	POLYETHYLENE
COM	COMMUNICATIONS	PS	PRESSURE SEWER
(E)	EXISTING	ROW	RIGHT-OF-WAY
FO	FIBER OPTICS LINE	R	RADIUS
FF	FINISH FLOOR	RWL	RAIN WATER LEADER
FG	FINISH GRADE	SS	SANITARY SEWER
FR	FIRE RISER	SLV	PIPE SLEEVE
FW	FIRE WATER	XXX.XX	SPOT ELEVATION
GL	GUTTER LINE	SD	STORM DRAIN
IE	INVERT ELEVATION	T	TELEPHONE
IR	IRRIGATION	TV	TELEVISION
LS	LANDSCAPE	TA	TOP OF ASPHALT ELEVATION
MON	MONUMENT	TC	TOP OF CONCRETE ELEVATION
NG	NATURAL GAS	TG	TOP OF GRAVEL ELEVATION
NIC	NOT IN CONTRACT	TW	TOP OF WALL ELEVATION
NTS	NOT TO SCALE	TYP	TYPICAL
OHP	OVERHEAD POWER	W	WATER
P	POWER		

SAWCUT LINE
NEW EASEMENT LINE
PROPERTY LINE
100 EXISTING CONTOUR
100 NEW CONTOUR
EXISTING FENCE
NEW FENCE
REMOVE FENCE
REMOVE SURFACE FEATURE
REMOVE UNDERGROUND UTILITY
ABANDONED UNDERGROUND UTILITY
EXISTING UNDERGROUND UTILITY
NEW UNDERGROUND UTILITY
RAIL ROAD TRACKS

DRAWING INDEX

KNUTZEN ENGINEERING
5401 RIDGELINE DR.
SUITE 160
KENNEWICK, WA 99338
1-509-222-0959
www.knutzenengineering.com

No.	REVISIONS	DATE	DESIGN	CHKD	APPD

REGISTERED PROFESSIONAL ENGINEER 83108PE OREGON JULY 14, 2009 PAUL T. KNUTZEN
EXPIRATION DATE: 06/30/2023
06/23/21

GENERAL NOTES AND LEGEND

LCR CONSTRUCTION
LCR UMATILLA GAS STATION
205 WILLAMETTE ST, UMATILLA, OR 97882

APPROVAL		
DESIGN	RAM	06/23/21
CHECKED	PTK	06/23/21
APPROVED	PTK	06/23/21

SCALE: AS NOTED
CADFILE: 21096C01
JOB No. 21096
REV. 0
DWG. No. C001

\\2021\21096-LCR Umatilla Gas Station\DWG\21096C01.dwg - Jun 23,2021 - 02:47pm - rmc

A1 SURVEY
SCALE: NOT TO SCALE

TOPOGRAPHIC DESIGN SURVEY

NE 1/4 OF SEC. 15, T.05N., R.28E., W.M., UMATILLA COUNTY, OREGON

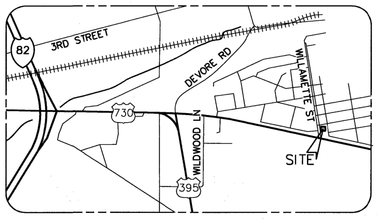

VICINITY SKETCH
NOT TO SCALE

DESCRIPTION

TRACT I
COMMENCING AT THE NORTHWEST CORNER OF SECTION 14, TOWNSHIP 5 NORTH, RANGE 28, EAST OF THE WILLAMETTE MERIDIAN, UMATILLA COUNTY, OREGON; THENCE SOUTH 05°53'50" WEST, A DISTANCE OF 2,125.53 FEET TO A POINT ON THE WEST LINE OF MCNARY TOWNSITE, AN ADDITION TO THE CITY OF UMATILLA, SAID POINT ALSO BEING THE POINT OF INTERSECTION OF THE SOUTH LINE OF WALLA WALLA STREET WITH THE WEST LINE OF UMATILLA AVENUE; THENCE WESTERLY ALONG THE SOUTH LINE OF SAID WALLA WALLA STREET, A DISTANCE OF 65 FEET TO THE TRUE POINT OF BEGINNING FOR THIS DESCRIPTION; THENCE SOUTH 09°37'40" EAST, A DISTANCE OF 150 FEET; THENCE SOUTH 80°21'20" WEST, A DISTANCE OF 180 FEET TO A POINT ON EAST LINE OF WILLAMETTE AVENUE; THENCE NORTHERLY ALONG THE EAST LINE OF SAID WILLAMETTE AVENUE, A DISTANCE OF 150 FEET TO THE POINT OF INTERSECTION OF THE EAST LINE OF SAID WILLAMETTE AVENUE WITH THE SOUTH LINE OF SAID WALLA WALLA STREET; THENCE EASTERLY ALONG THE SOUTH LINE OF SAID WALLA WALLA STREET, A DISTANCE OF 180 FEET TO THE POINT OF BEGINNING;
EXCEPTING THEREFROM ANY PORTION LYING WITHIN THE STREET AND AVENUE RIGHTS-OF-WAYS.

TRACT II
COMMENCING AT THE NORTHWEST CORNER OF SECTION 14, TOWNSHIP 5 NORTH, RANGE 28, EAST OF THE WILLAMETTE MERIDIAN, UMATILLA COUNTY, OREGON; THENCE SOUTH 05°53'50" WEST, A DISTANCE OF 2,125.53 FEET TO A POINT ON THE WEST LINE OF MCNARY TOWNSITE, AN ADDITION TO THE CITY OF UMATILLA, SAID POINT ALSO BEING THE POINT OF INTERSECTION OF THE SOUTH LINE OF WALLA WALLA STREET WITH THE WEST LINE OF UMATILLA AVENUE; THENCE SOUTH 09°37'40" EAST ALONG THE WEST LINE OF SAID UMATILLA AVENUE, A DISTANCE OF 150 FEET; THENCE SOUTH 80°22'20" WEST, A DISTANCE OF 100 FEET TO THE TRUE POINT OF BEGINNING FOR THIS DESCRIPTION: THENCE SOUTH 80°22'20" WEST, A DISTANCE OF 145 FEET TO A POINT ON THE EAST LINE OF WILLAMETTE AVENUE; THENCE SOUTH 09°37'40" EAST ALONG THE EAST LINE OF SAID WILLAMETTE AVENUE, A DISTANCE OF 144.82 FEET TO A POINT ON THE NORTH RIGHT-OF-WAY LINE OF OREGON STATE HIGHWAY NO. 730; THENCE SOUTH 77°50'35" EAST ALONG THE NORTH RIGHT-OF-WAY LINE OF SAID STATE HIGHWAY, A DISTANCE OF 156.15 FEET; THENCE NORTH 09°37'40" WEST, A DISTANCE OF 202.77 FEET TO THE POINT OF BEGINNING;
EXCEPTING THEREFROM ANY PORTION LYING WITHIN THE AVENUE AND HIGHWAY RIGHTS-OF-WAYS.

TOGETHER WITH AND SUBJECT TO EASEMENTS, RESERVATIONS, COVENANTS AND RESTRICTIONS, OF RECORD AND IN VIEW.

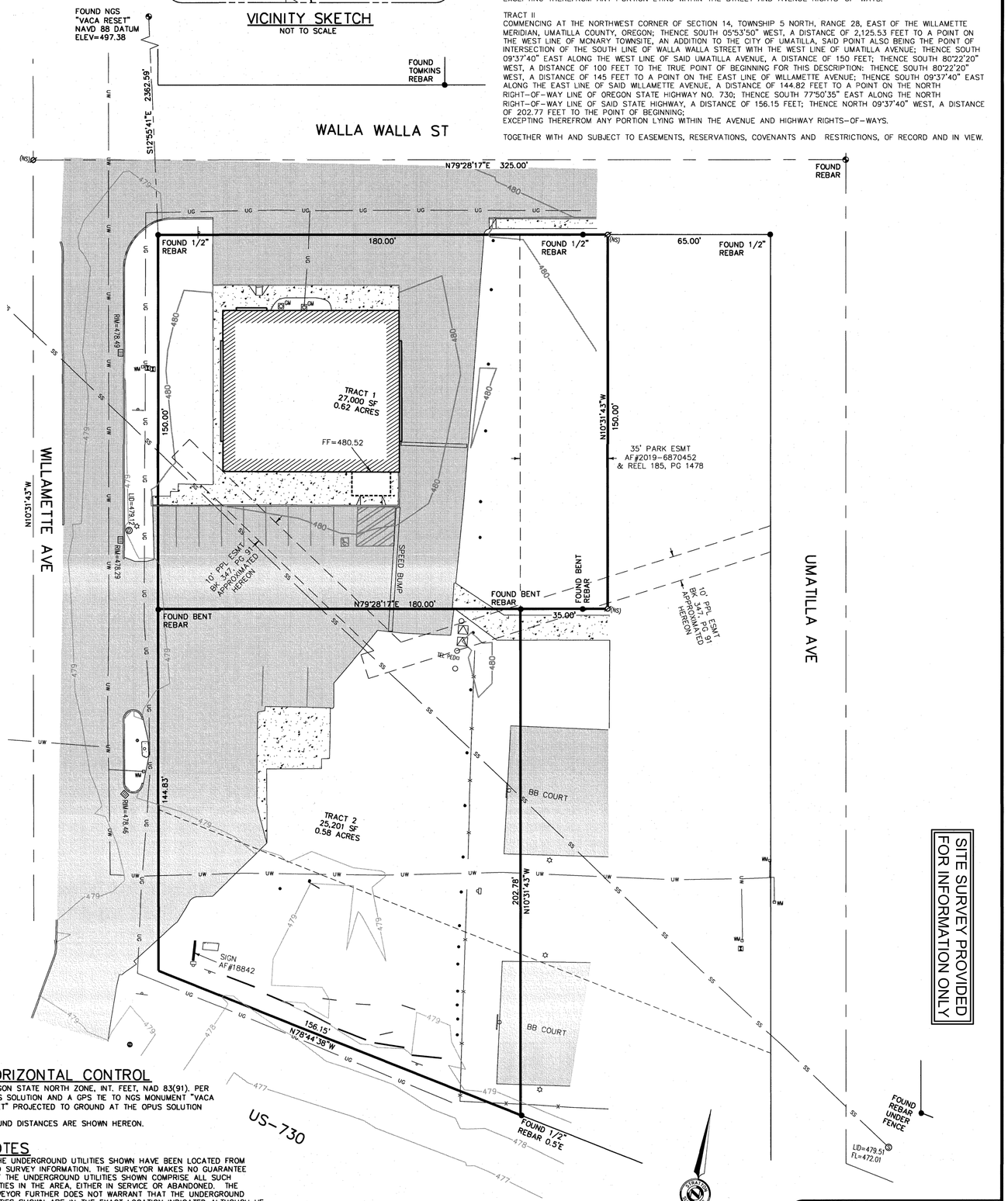

SITE SURVEY PROVIDED FOR INFORMATION ONLY

HORIZONTAL CONTROL

OREGON STATE NORTH ZONE, INT. FEET, NAD 83(91). PER OPUS SOLUTION AND A GPS TIE TO NGS MONUMENT "VACA RESET" PROJECTED TO GROUND AT THE OPUS SOLUTION

GROUND DISTANCES ARE SHOWN HEREON.

NOTES

1. THE UNDERGROUND UTILITIES SHOWN HAVE BEEN LOCATED FROM FIELD SURVEY INFORMATION. THE SURVEYOR MAKES NO GUARANTEE THAT THE UNDERGROUND UTILITIES SHOWN COMPRISE ALL SUCH UTILITIES IN THE AREA, EITHER IN SERVICE OR ABANDONED. THE SURVEYOR FURTHER DOES NOT WARRANT THAT THE UNDERGROUND UTILITIES SHOWN ARE IN THE EXACT LOCATION INDICATED ALTHOUGH HE DOES CERTIFY THAT THEY ARE LOCATED AS ACCURATELY AS POSSIBLE FROM THE INFORMATION AVAILABLE. THIS SURVEYOR HAS NOT PHYSICALLY LOCATED THE UNDERGROUND UTILITIES. LOCATIONS OF SAID UTILITIES WERE DERIVED FROM FIELD ASBUILT OBSERVATIONS, INTEGRATED CITY SUPPLIED ASBUILT DATA, AND UDIG SURFACE MARKINGS.

2. THE CONTOURS SHOWN WERE DERIVED FROM DIRECT FIELD OBSERVATIONS. ACCURACY OF SHOWN CONTOURS MEET OR EXCEED THE US NATIONAL MAP ACCURACY STANDARDS, OF ONE-HALF THE CONTOUR INTERVAL.

3. THIS SURVEY DOES NOT CONSTITUTE A TITLE SEARCH BY STRATTON SURVEYING AND MAPPING PC. FOR ALL INFORMATION REGARDING EASEMENTS, RIGHTS-OF-WAY AND TITLE OF RECORD SEE TITLE SEARCH PREPARED BY PIONEER TITLE COMPANY, ORDER NUMBER 102619, DATED 04/14/2021, OF WHICH WAS RELIED UPON TO PLOT SAID ITEMS.

4. THIS IS A TOPOGRAPHIC MAP. THIS IS NOT A BOUNDARY SURVEY AND IS ONLY INTENDED TO DEPICT THOSE TOPOGRAPHIC FEATURES OR IMPROVEMENTS SHOWN HEREON. THE PROPERTY LINES SHOWN ARE RECORD LINES AND ARE ONLY SHOWN FOR GRAPHICAL REFERENCE.

5. THE PURPOSE OF THIS TOPOGRAPHIC SURVEY IS FOR THE USE AND AID IN THE DESIGN OF A CIVIL SITE PLAN.

6. FIELD WORK COMPETED 04/06/21

REGISTERED PROFESSIONAL LAND SURVEYOR
OREGON
NOV. 13, 2012
DEREK C. INGALSBE
#89060
RENEWS: 06/30/21

LEGEND

- = FOUND AS INDICATED
- = NOT FOUND OR SET
- = FOUND MONUMENT AS INDICATED
- = BOLLARD
- = CONCRETE CURB EXTRUDED
- = GAS METER
- = IRRIGATION CONTROL VALVE
- = LIGHT POLE, PARKING
- = POWER METER
- = POWER TRANSFORMER
- = SANITARY SEWER MANHOLE
- = SIGN
- = STORM CATCH BASIN
- = STORM MANHOLE
- TEL PEDD = TELEPHONE PEDESTAL
- WV = WATER VALVE
- WM = WATER METER
- = FENCE
- = PROPERTY BOUNDARY
- = CENTERLINE
- SS = SANITARY SEWER LINE
- UG = GAS LINE
- UW = WATERLINE UNDERGROUND
- = CONCRETE
- = ASPHALT
- = BUILDING

NOT TO SCALE
SCALE 1" = 20'
0 20 40 60

BASIS OF BEARING
OR STATE GRID
NORTH ZONE NAD 83(91)

BASIS OF ELEVATION
NGS MONUMENT "VACA RESET"
NAVD 88 DATUM
ELEV=497.38'

EQUIPMENT USED
A THREE-SECOND TOTAL STATION
SPECTRA PRECISION RTK GPS

TOPOGRAPHIC SURVEY FOR
LCR Construction, LLC

STRATTON SURVEYING & MAPPING P.C.
313 NORTH MORAIN STREET
KENNEWICK, WA 99336
(509) 735-7364
FAX: (509) 735-6560
www.strattonsurvey.com

5806TP1.DWG	© 2021
DATE: 04/27/21	SHT. 1 OF 1
DRAWN BY: DCI	JOB # 5806

C003
DWG. No.

DESIGN	RAM	06/23/21	APPROVAL
CHECKED	PTK	06/23/21	
APPROVED	PTK	06/23/21	

JOB No. 21096
REV. 0
CADFILE: 21096C01
SCALE: AS NOTED

SURVEY
LCR CONSTRUCTION
LCR UMATILLA GAS STATION
205 WILLAMETTE ST, UMATILLA, OR 97882

06/23/21

No.	REVISIONS	DATE	DESIGN	CHKD	APPD

KNUTZEN ENGINEERING
5401 RIDGELINE DR.
SUITE 160
KENNEWICK, WA 99338
1-509-222-0959
www.knutzenengineering.com

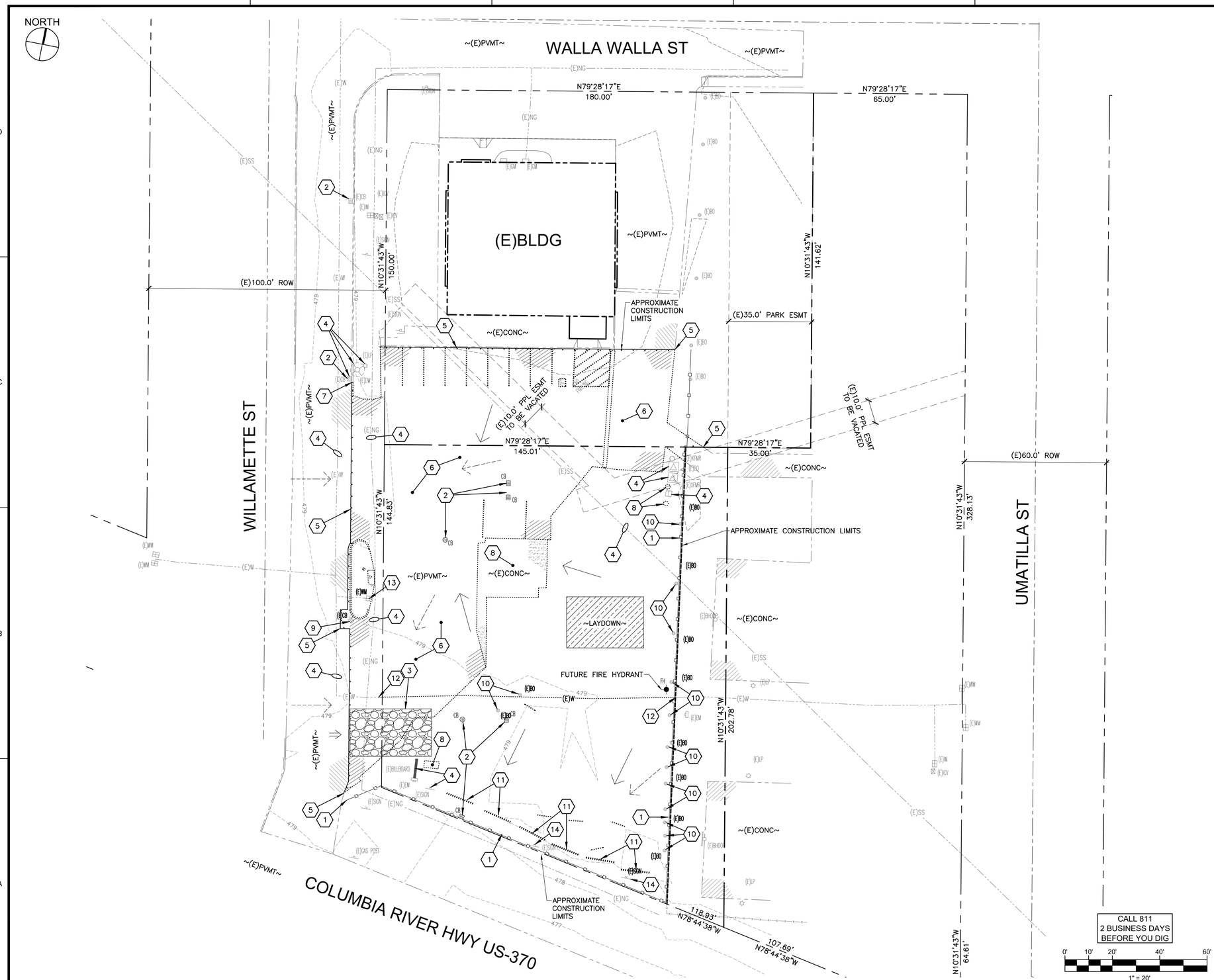

A1 DEMOLITION & EROSION CONTROL PLAN
SCALE: 1" = 20'-0"

KEY NOTES

1. SILT FENCING SHALL BE INSTALLED AT LOCATIONS SHOWN AND AS NEEDED AT ANY LOCATIONS OF SITE WHERE SURFACE RUNOFF MAY ERODE SOILS AWAY FROM SITE, CONTRACTOR SHALL INSTALL ADDITIONAL SILT FENCING AS NECESSARY, REFER TO DETAIL B2/C501
2. EXISTING AND PROPOSED DRAINAGE STRUCTURE TO BE PROTECTED WITH FILTER FABRIC, SEE DETAIL B1/C501
3. CONSTRUCTION ACCESS, SEE GENERAL NOTES ON SHEET C001
4. PROTECT UTILITY/SIGN IN PLACE.
5. SAWCUT ASPHALT, PROVIDE NEAT CUT EDGE.
6. REMOVE ASPHALT AND DISPOSE OF PROPERLY.
7. SAWCUT CONCRETE CURB AT NEAREST JOINT. REMOVE CURBING AND DISPOSE OF PROPERLY.
8. REMOVE CONCRETE AND DISPOSE OF PROPERLY.
9. REMOVE EXISTING CATCH BASIN AND DISPOSE OF PROPERLY. ABANDON ANY ATTACHED PIPING.
10. REMOVE EXISTING BOLLARD AND DISPOSE OF PROPERLY.
11. REMOVE EXISTING WHEEL STOP AND DISPOSE OF PROPER
12. CUT AND CAP EXISTING WATER LINE. REMOVE EXISTING WATER PIPE FROM UNDERNEATH FUTURE STRUCTURE LOCATIONS.
13. REMOVE EXISTING WATER METER AND CAP SERVICE LINE.
14. SALVAGE EXISTING SIGN AND PROVIDE TO OWNER.

LEGEND

- EXISTING STORMWATER FLOW PATH
- NEW STORMWATER FLOW PATH
- CONTRACTOR LAYDOWN AND STORAGE AREA
- LIMITS OF CONSTRUCTION LINE
- SILT FENCE
- CONSTRUCTION VEHICLE ACCESS POINTS TO PUBLIC ROADS
- CONSTRUCTION ACCESS EROSION CONTROL

NOTES

1. SEE SHEET C001 FOR GENERAL NOTES AND LEGEND.
2. MOST SUITABLE LOCATION FOR CONSTRUCTION ENTRANCE TO BE DETERMINED BY GENERAL CONTRACTOR. CONSTRUCTION ENTRANCE SHOWN ON DRAWING IS A SUGGESTED LOCATION ONLY.
3. FINAL CONSTRUCTION LAY-DOWN AREA AND STOCKPILE AREA LOCATION AND SIZE TO BE DETERMINED BY THE GENERAL CONTRACTOR WITH APPROVAL OF OWNER.
4. CUT & FILL SLOPES SHOULD BE CONSTRUCTED WITH INCLINATION NO STEEPER THEN 2H:1V AND MUST BE PROTECTED FROM WIND AND EROSION.
5. PLACE TOPSOIL, COMPACT, AND PROVIDE TEMPORARY SOIL STABILIZATION. PERMANENT LANDSCAPING CAN BE INSTALLED ONCE LIKELIHOOD OF SEDIMENTATION DURING CONSTRUCTION IS REDUCED, UPSTREAM AREAS ARE FULLY STABILIZED, AND IRRIGATION SYSTEM IS OPERATIONAL.
6. EROSION, SEDIMENT, AND AIR QUALITY CONTROL SHALL COMPLY WITH THE COUNTY AND CITY AIR QUALITY CONTROL ORDINANCES, AND THE NOTES AND DETAILS ON THESE PLANS.
7. PROVIDE INLET PROTECTION ON ALL STORM DRAIN INLETS SURROUNDING SITE, INSPECT FABRIC REGULARLY AND REPLACE AS NECESSARY IF FOUND TO BE RIPPED OR TORN.
8. ANYTIME AN OPEN TRENCH AND DEMOLITION AREAS ARE PRESENT DURING NON WORK HOURS THE CONTRACTOR SHALL HAVE PORTABLE 6.0' CHAIN LINK CONSTRUCTION FENCE IN PLACE AROUND THE WORK AREA.

KNUTZEN ENGINEERING
5401 RIDGELINE DR.
SUITE 160
KENNEWICK, WA 99338
1-509-222-0959
www.knutzenengineering.com

No.	REVISIONS	DATE	DESIGN	CHKD	APPD

REGISTERED PROFESSIONAL ENGINEER 83108PE OREGON JULY 14, 2009 PAUL T. KNUTZEN
EXPIRATION DATE: 06/30/2023
06/23/21

DEMOLITION & EROSION CONTROL PLAN

LCR CONSTRUCTION
LCR UMATILLA GAS STATION
205 WILLAMETTE ST, UMATILLA, OR 97882

APPROVAL		
DESIGN	RAM	06/23/21
CHECKED	PTK	06/23/21
APPROVED	PTK	06/23/21

SCALE: AS NOTED
CADFILE: 21096C01
JOB No. 21096 REV. 0
DWG. No. C005

\2021\21096-LCR Umatilla Gas Station\DWG\21096C01.dwg - Jun 23,2021 - 02:47pm - rmc

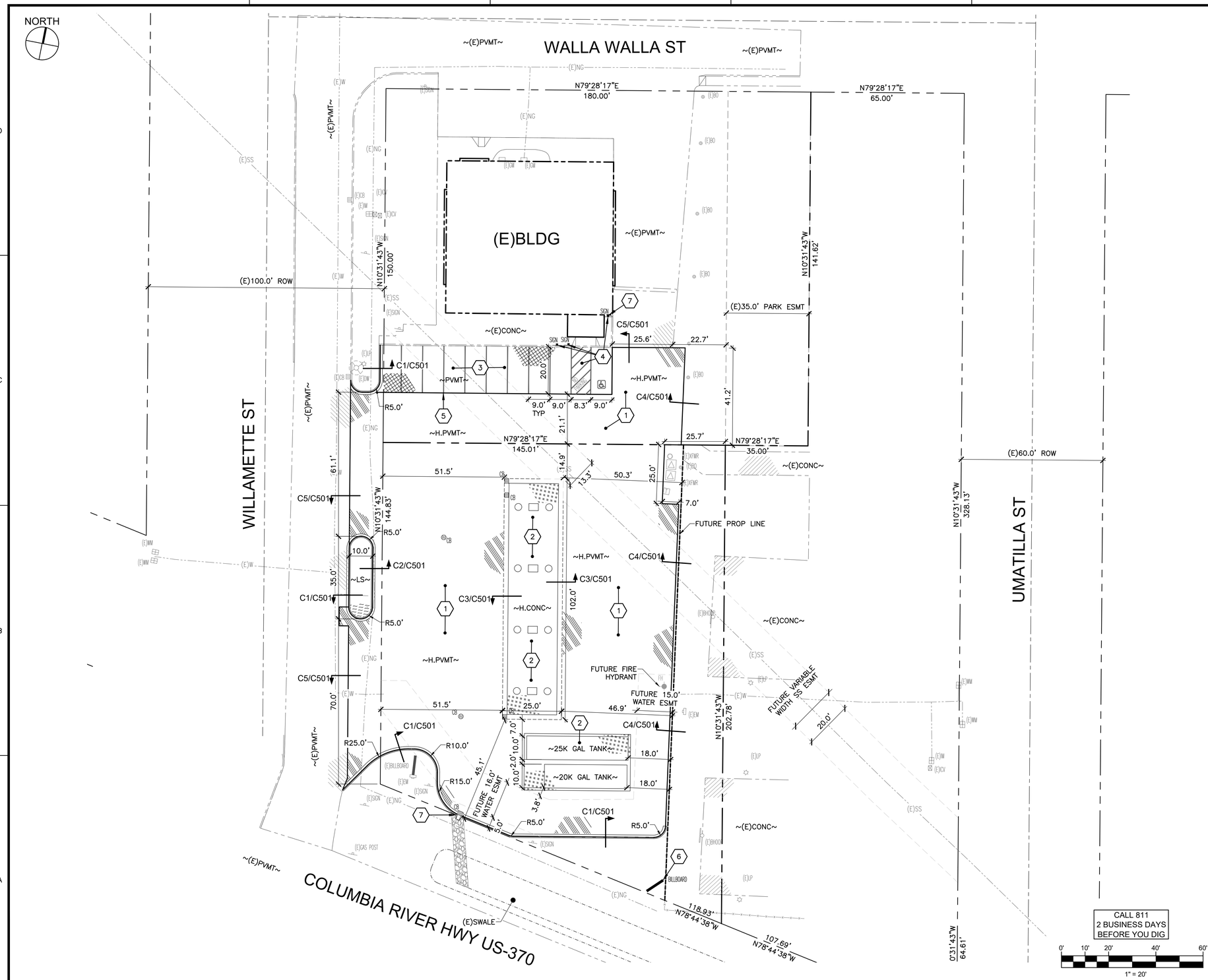

A1 SITE PLAN
SCALE: 1" = 20'-0"

KEY NOTES

1. HEAVY ASPHALT SECTION – 4" THICK ASPHALT OVER 10" TOP COURSE. REFER TO GEOTECH REPORT PREPARED BY GN NORTHERN, PROJECT #221-1366.
2. HEAVY CONCRETE SECTION – 8" THICK CONCRETE OVER 6" TOP COURSE. TROWEL CONTROL JOINTS AT 10' O.C. AND INSTALL EXPANSION JOINTS AT 30' O.C. REFER TO GEOTECH REPORT PREPARED BY GN NORTHERN, PROJECT #221-1366. PROVIDE REBAR REINFORCEMENT PER GEOTECH REPORT.
3. STANDARD ASPHALT SECTION – 2-1/2" THICK ASPHALT OVER 8" TOP COURSE. REFER TO GEOTECH REPORT PREPARED BY GN NORTHERN, PROJECT #221-1366.
4. INSTALL ADA SIGNAGE AND PAINT WHITE 4" WIDE PARKING STRIPING, LETTERING, AND ACCESSIBLE PARKING SYMBOLS PER ODOT ADA STANDARD FIGURES 1,6, AND 7. DRILL HOLES IN EXISTING SIDEWALK AS NECESSARY FOR INSTALLATION OF SIGN POSTS. CEMENT IN PLACE NEW POSTS.
5. PAINT 4" WHITE PARKING STRIPE, TYP
6. SIGN, SEE OWNER FOR DETAILS.
7. INLET AND RIPRAP, SEE DETAIL D4/C501

NOTES

1. SEE SHEET C001 FOR GENERAL NOTES AND LEGEND.
2. CURB RETURN RADII ARE 5.0' RADIUS UNLESS NOTED OTHERWISE.
3. DIMENSIONS ARE TO FACE OF CURB, UNLESS NOTED OTHERWISE. FIELD VERIFY ALL MEASUREMENTS AND INVERTS PRIOR TO START OF WORK.
4. A SEALED EXPANSION JOINT MATERIAL SHALL BE USED AT JOINTS WHERE NEW CONCRETE ABUTS EXISTING CONCRETE (TYP), SEE WSDOT STD PLAN A-40.10-04 FOR REINFORCEMENT BAR SPACING AND JOINTS.
5. WHERE NEW SIDEWALK, DRIVEWAY OR ACCESSIBLE RAMP TIES INTO (E)SIDEWALK, REMOVE AND REPLACE ADDITIONAL SIDEWALK PANEL FOR ADA TRANSITION IF REQUIRED.
6. REFER TO LANDSCAPE FOR FENCING, GATES AND/OR MOW STRIP.
7. PARKING:
   9 STANDARD STALLS, 1 ACCESSIBLE VAN STALLS, TOTAL 10 STALLS.
8. AREA:
   38,367 IMPERVIOUS AREA, 9,685 PERVIOUS AREA (20%), 48,052 SF TOTAL PROPERTY AREA.
9. REFER TO CITY OF UMATILLA WATER MAIN RELOCATION PLANS FOR FUTURE FIRE HIDYRANT, WATER MAIN, AND WATER EASEMENT SEPCIFICATIONS.

KNUTZEN ENGINEERING
5401 RIDGELINE DR.
SUITE 160
KENNEWICK, WA 99338
1-509-222-0959
www.knutzenengineering.com

No.	REVISIONS	DATE	DESIGN	CHKD	APPD

REGISTERED PROFESSIONAL ENGINEER 83108PE OREGON JULY 14, 2009 PAUL T. KNUTZEN
EXPIRATION DATE: 06/30/2023
06/23/21

SITE PLAN
LCR CONSTRUCTION
LCR UMATILLA GAS STATION
205 WILLAMETTE ST, UMATILLA, OR 97882

APPROVAL		
DESIGN	RAM	06/23/21
CHECKED	PTK	06/23/21
APPROVED	PTK	06/23/21

SCALE: AS NOTED
CADFILE: 21096C01
JOB No. 21096
REV. 0
DWG. No. C101

\202\21096-LCR Umatilla Gas Station\DWG\21096C01.dwg - Jun 23,2021 - 02:47pm - mmc

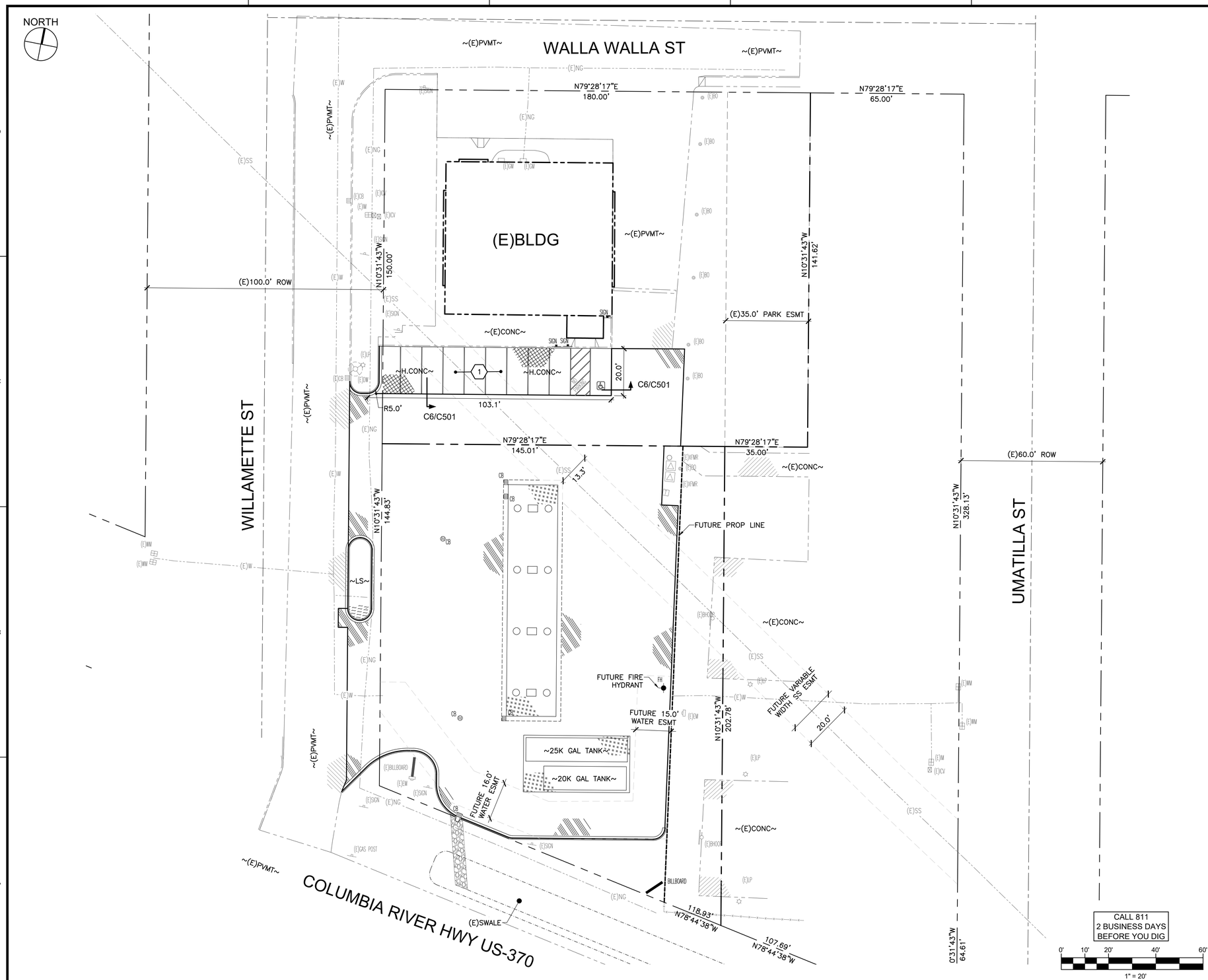

A1 SITE PLAN
SCALE: 1" = 20'-0"

KEY NOTES

1. HEAVY CONCRETE SECTION – 8" THICK CONCRETE OVER 6" TOP COURSE. TROWEL CONTROL JOINTS AT 10' O.C. AND INSTALL EXPANSION JOINTS AT 30' O.C. REFER TO GEOTECH REPORT PREPARED BY GN NORTHERN, PROJECT #221–1366. PROVIDE REBAR REINFORCEMENT PER GEOTECH REPORT.

NOTES

1. SEE SHEET C001 FOR GENERAL NOTES AND LEGEND.
2. CURB RETURN RADII ARE 5.0' RADIUS UNLESS NOTED OTHERWISE.
3. DIMENSIONS ARE TO FACE OF CURB, UNLESS NOTED OTHERWISE. FIELD VERIFY ALL MEASUREMENTS AND INVERTS PRIOR TO START OF WORK.
4. A SEALED EXPANSION JOINT MATERIAL SHALL BE USED AT JOINTS WHERE NEW CONCRETE ABUTS EXISTING CONCRETE (TYP).
5. REFER TO CITY OF UMATILLA WATER MAIN RELOCATION PLANS FOR FUTURE FIRE HDYRANT, WATER MAIN, AND WATER EASEMENT SEPCIFICATIONS.

KNUTZEN ENGINEERING
5401 RIDGELINE DR.
SUITE 160
KENNEWICK, WA 99338
1-509-222-0959
www.knutzenengineering.com

No.	REVISIONS	DATE	DESIGN	CHKD	APPD

REGISTERED PROFESSIONAL ENGINEER 83108PE OREGON JULY 14, 2009 PAUL T. KNUTZEN
EXPIRATION DATE: 06/30/2023
06/23/21

BID ALTERNATE 1

LCR CONSTRUCTION
LCR UMATILLA GAS STATION
205 WILLAMETTE ST, UMATILLA, OR 97882

APPROVAL		
DESIGN	RAM	06/23/21
CHECKED	PTK	06/23/21
APPROVED	PTK	06/23/21

SCALE: AS NOTED
CADFILE: 21096C01
JOB No. 21096
REV. 0
DWG. No. C102

\202\21096-LCR Umatilla Gas Station\DWG\21096C01.dwg - Jun 23,2021 - 02:47pm - rmc

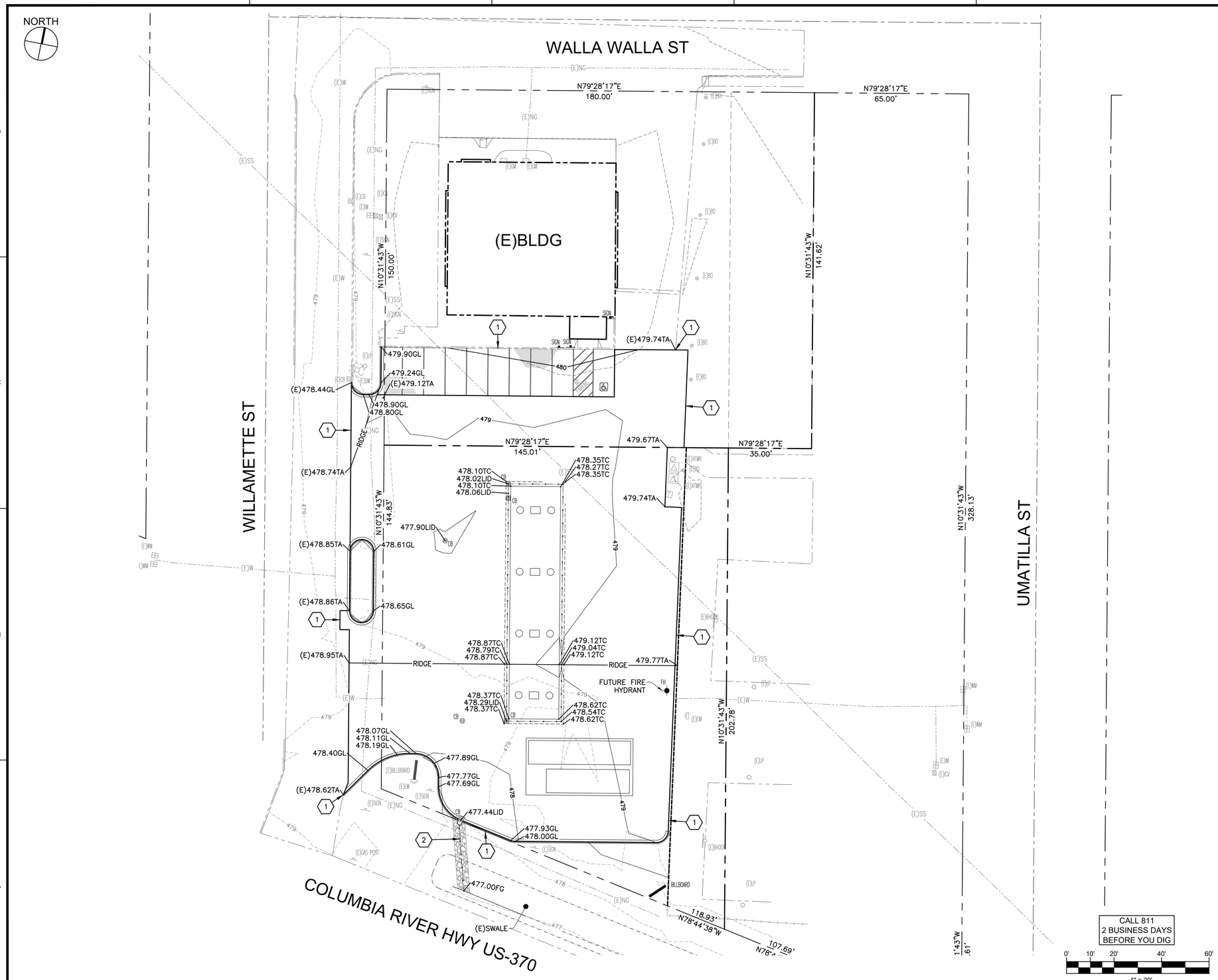

A1 GRADING PLAN
SCALE: 1" = 20'-0"

KEY NOTES

1. MEET AND MATCH EXISTING ELEVATION
2. GRADE 0.5' DEEP V-DITCH CONNECTING CURB INLET TO BOTTOM OF EXISTING SWALE. MAX 3:1 SIDE SLOPES TO MATCH (E)ELEVATIONS.

NOTES

1. SEE DRAWING C001 FOR GENERAL NOTES AND LEGEND.
2. SPOT ELEVATIONS AND CONTOURS ARE TO THE TOP OF SIDEWALK, CURB, OR PAVEMENT FINISHED SURFACE UNLESS NOTED OTHERWISE.
3. FIELD VERIFY ALL MEASUREMENTS AND INVERTS PRIOR TO START OF WORK. IMMEDIATELY NOTIFY ARCHITECT OF DISCREPANCIES BEFORE WORK COMMENCES.
4. SEE DRAWING C121 FOR CATCH BASIN LOCATION DIMENSIONS.
5. DO NOT EXCEED MAXIMUM SLOPE OF 4:1 IN ALL AREAS OF SITE.
6. DO NOT COMPACT SOILS IN SWALE AREAS BEYOND 85% OF MDD PER ASTM D1557.

KNUTZEN ENGINEERING
5401 RIDGELINE DR.
SUITE 160
KENNEWICK, WA 99338
1-509-222-0959
www.knutzenengineering.com

No.	REVISIONS	DATE	DESIGN	CHKD	APPD

REGISTERED PROFESSIONAL ENGINEER 83108PE OREGON JULY 14, 2009 PAUL T. KNUTZEN
EXPIRATION DATE: 06/30/2023
06/23/21

GRADING PLAN
LCR CONSTRUCTION
LCR UMATILLA GAS STATION
205 WILLAMETTE ST, UMATILLA, OR 97882

APPROVAL		
DESIGN	RAM	06/23/21
CHECKED	PTK	06/23/21
APPROVED	PTK	06/23/21

SCALE: AS NOTED
CADFILE: 21096C01
JOB No. 21096
REV. 0
DWG. No. C111

\2021\21096-LCR Umatilla Gas Station\DWG\21096C01.dwg - Jun 23,2021 - 02:47pm - rmc

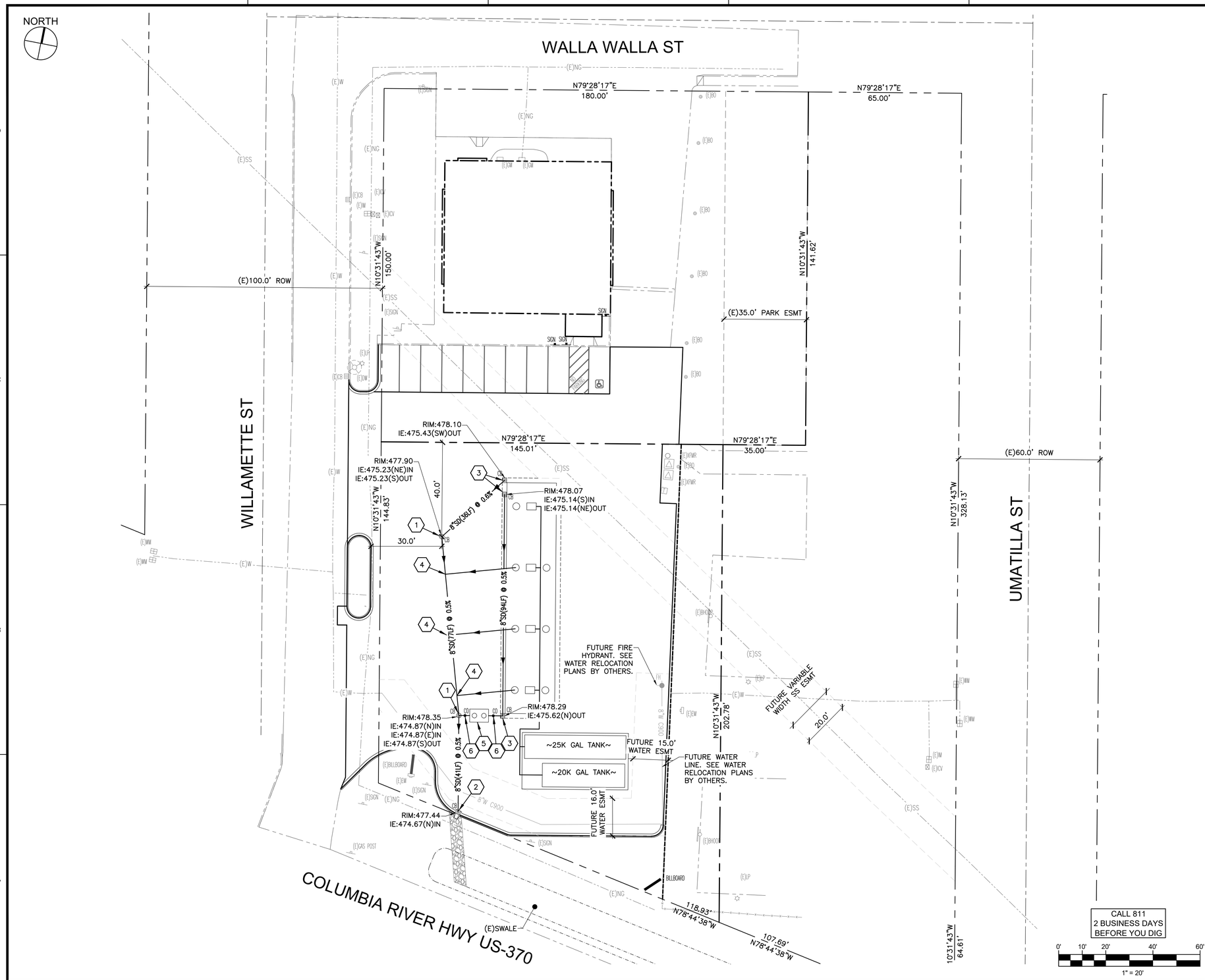

A1 UTILITY PLAN
SCALE: 1" = 20'-0"

KEY NOTES

1. FLUSH CATCH BASIN, SEE DETAIL D1/C501
2. CATCH BASIN IN CURB, SEE DETAIL D2/C501
3. CATCH BASIN IN VALLEY GUTTER, SEE DETAIL D3/C501
4. TIE CANOPY LEADERS AND INTO STORM. REFER TO CANOPY PLANS.
5. OIL WATER SEPARATOR, SEE DETAIL D5/C501
6. CLEANOUT TO GRADE, SEE DETAIL D6/C501

NOTES

1. SEE DRAWING C001 FOR GENERAL NOTES AND LEGEND.
2. ALL UNDERGROUND UTILITIES ON THE SITE MAY NOT BE SHOWN. FIELD LOCATE AND VERIFY ALL UNDERGROUND UTILITIES. COORDINATE ALL RELOCATION WORK WITH THE APPROPRIATE UTILITY COMPANY AND/OR OWNER PRIOR TO ANY EXCAVATION WORK.
3. FIELD VERIFY ALL MEASUREMENTS AND INVERTS PRIOR TO START OF WORK. IMMEDIATELY NOTIFY ARCHITECT OF DISCREPANCIES BEFORE WORK COMMENCES.
4. ALL SITE ELECTRICAL WORK MAY NOT BE SHOWN ON THE CIVIL SITE DRAWINGS, SITE ELECTRICAL IS SHOWN FOR REFERENCE PURPOSES ONLY. REFER TO ELECTRICAL PLANS IN THIS CONSTRUCTION PACKAGE FOR ELECTRICAL DEMOLITION, RELOCATION, AND NEW INSTALLATION.
5. REFER TO CITY OF UMATILLA WATER MAIN RELOCATION PLANS FOR FUTURE FIRE HDYRANT, WATER MAIN, AND WATER EASEMENT SEPCIFICATIONS.

KNUTZEN ENGINEERING
5401 RIDGELINE DR.
SUITE 160
KENNEWICK, WA 99338
1-509-222-0959
www.knutzenengineering.com

No.	REVISIONS	DATE	DESIGN	CHKD	APPD

REGISTERED PROFESSIONAL ENGINEER 83108PE OREGON JULY 14, 2009 PAUL T. KNUTZEN
EXPIRATION DATE: 06/30/2023
06/23/21

UTILITY PLAN
LCR CONSTRUCTION
LCR UMATILLA GAS STATION
205 WILLAMETTE ST, UMATILLA, OR 97882

APPROVAL		
DESIGN	RAM	06/23/21
CHECKED	PTK	06/23/21
APPROVED	PTK	06/23/21

SCALE: AS NOTED
CADFILE: 21096C01
JOB No. 21096
REV. 0
DWG. No. C121

\\2021\21096-LCR Umatilla Gas Station\DWG\21096C01.dwg - Jun 23,2021 - 02:47pm - rmc

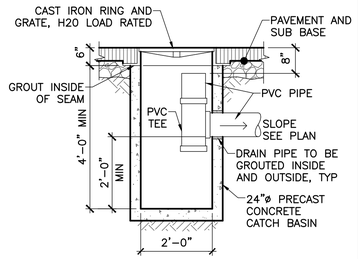

D1 FLUSH CATCH BASIN

SCALE: 1/2" = 1'-0" REF: C121

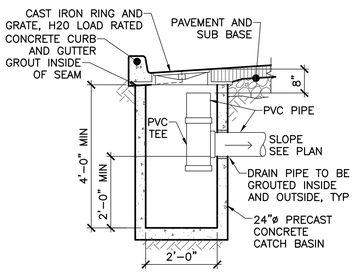

D2 CATCH BASIN IN CURB

SCALE: 1/2" = 1'-0" REF: C121

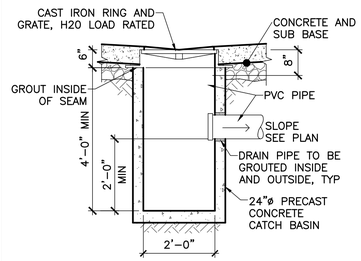

D3 CATCH BASIN IN VALLEY

SCALE: 1/2" = 1'-0" REF: C121

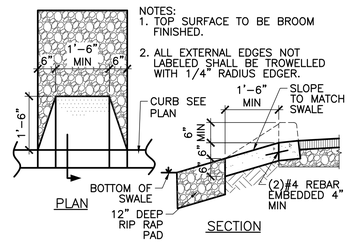

D4 CURB INLET

SCALE: 1/2" = 1'-0" REF: C101

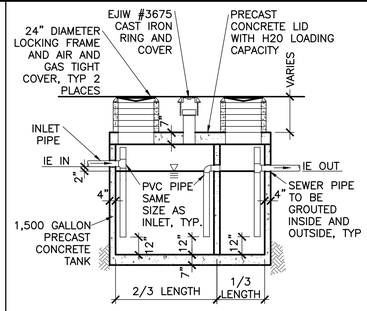

D5 OIL WATER SEPARATOR

SCALE: 1/4" = 1'-0" REF: C121

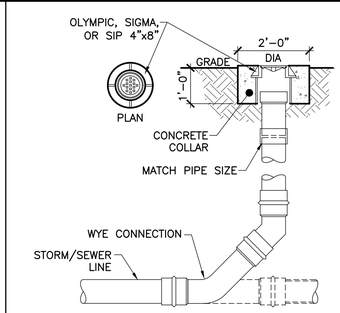

D6 CLEAN OUT TO GRADE

SCALE: 1/2" = 1'-0" REF: C121

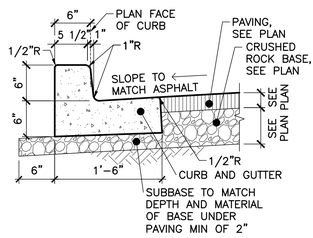

NOTE: INSTALL DUMMY JOINTS AT 5'-0" C/C AND 1/2" EXPANSION JOINTS AT 30'-0" C/C AND AT TERMINATIONS AGAINST CURB OR SIDEWALK INTERSECTIONS UNLESS NOTED OTHERWISE BY ARCHITECT. SEE ARCHITECTURAL SITE PLAN FOR FINISH REQUIREMENTS.

C1 CURB AND GUTTER

SCALE: 1" = 1'-0" REF: C101

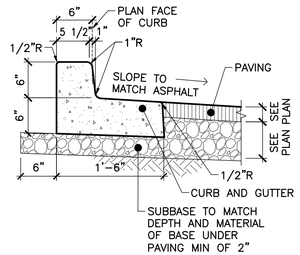

NOTES: INSTALL DUMMY JOINTS AT 10'-0" C/C, AND 1/2" EXPANSION JOINTS EVERY 30'-0" AND AT START AND END OF CURVES.

C2 CURB AND GUTTER

SCALE: 1" = 1'-0" REF: C101

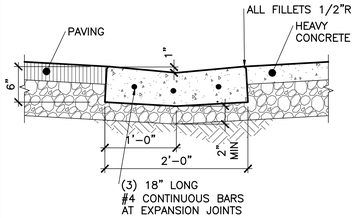

NOTES: INSTALL DUMMY JOINTS AT 10'-0" C/C, AND 1/2" EXPANSION JOINTS EVERY 30'-0" AND AT START AND END OF CURVES.

C3 CONCRETE VALLEY

SCALE: 1" = 1'-0" REF: C101

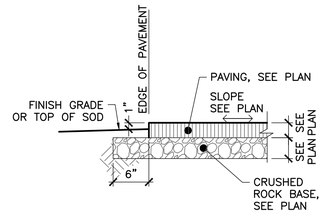

C4 EDGE OF ASPHALT

SCALE: 1" = 1'-0" REF: C101

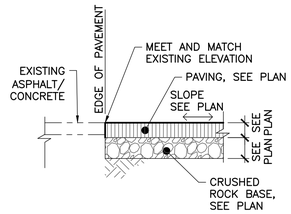

C5 EDGE OF ASPHALT

SCALE: 1" = 1'-0" REF: C101

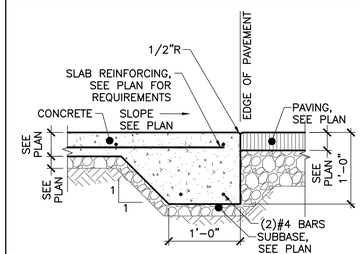

NOTE: INSTALL DUMMY JOINTS AT 5'-0" C/C AND 1/2" EXPANSION JOINTS AT 30'-0" C/C AND AT TERMINATIONS AGAINST CURB OR SIDEWALK INTERSECTIONS UNLESS NOTED OTHERWISE BY ARCHITECT. SEE ARCHITECTURAL SITE PLAN FOR FINISH REQUIREMENTS.

C6 EDGE OF CONCRETE

SCALE: 1" = 1'-0" REF: C101, 102

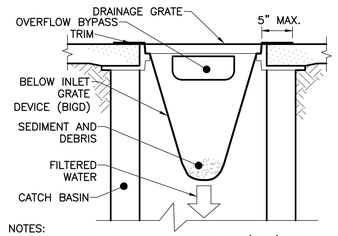

NOTES:
1. SIZE THE BELOW INLET GRATE DEVICE (BIGD) FOR THE STORMWATER STRUCTURE IT WILL SERVE.
2. THE BIGD SHALL HAVE A BUILT-IN HIGH-FLOW RELIEF SYSTEM (OVERFLOW BYPASS).
3. THE RETRIEVAL SYSTEM MUST ALLOW REMOVAL OF BIGD WITHOUT SPILLING THE COLLECTED MATERIAL.
4. PERFORM MAINTENANCE IN ACCORDANCE WITH WSDOT STANDARD SPECIFICATION 8.01.3.

B1 INLET PROTECTION

SCALE: 1" = 1'-0" REF: C005

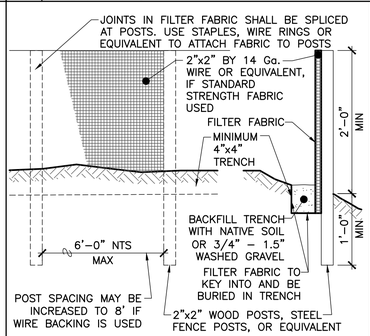

B2 SILT FENCE

SCALE: 1" = 1'-0" REF: C005

KNUTZEN ENGINEERING
5401 RIDGELINE DR.
SUITE 160
KENNEWICK, WA 99338
1-509-222-0959
www.knutzenengineering.com

No.	REVISIONS	DATE	DESIGN	CHKD	APPD

REGISTERED PROFESSIONAL ENGINEER 83108PE OREGON JULY 14, 2009 PAUL T. KNUTZEN

EXPIRATION DATE: 06/30/2023

06/23/21

SECTIONS AND DETAILS

LCR CONSTRUCTION

LCR UMATILLA GAS STATION

205 WILLAMETTE ST, UMATILLA, OR 97882

APPROVAL		
DESIGN	RAM	06/23/21
CHECKED	PTK	06/23/21
APPROVED	PTK	06/23/21

SCALE: AS NOTED

CADFILE: 21096C01

JOB No. 21096 REV. 0

DWG. No. C501

\202\21\1096-LCR Umatilla Gas Station\DWG\21096C01.dwg - Jun 23,2021 - 02:48pm - rmc

LOCAL BUSINESS GRANT APPLICATION

Date Received: _____

BUILDING/BUSINESS NAME: Kookee LLC - THE Bridge / Maple Moose

ADDRESS: 1501 6TH ST.

Please include the following items to complete your application:

☐Application with Owner Authorization {if the Applicant is not the property owner}

☐Lease Agreement or Letter of Intent to Lease between property owner and tenant

☐" Before" photographs of the property

☐ Any architectural drawings, plans, elevations, or sketches related to this project {for construction projects}

☐Proof of funds needed to complete proposed project

☐Applicants W-9

APPLICANT INFORMATION

Name:	Darren + Paulette Duffuth	Property Address:	1501 6TH ST
Mailing Address:	[redacted]		
Phone:	541-922-4112	Email:	

PROPERTY OWNER INFORMATION (If different from Applicant)

Name:		Property Address:	
Mailing Address:			
Phone:		Email:	

BUSINESS INFORMATION

Describe the business that occupies or will occupy the improved space. Please include hours of operation and the anticipated hours with the most customers/traffic:

The Bridge / Maple Moose coffee Co. 6A-3P early morning Business will be anticipated to be busiest time 6AM-10AM.

The coffee space will be inside the Restaurant area and will have walk in / drive up window and park and pickup service. The improved area is designated for the coffee space.

ABOUT THE PROPOSED PROJECT

Described the proposed project:

update Rear of Building for drive-up window for Maple Moose And the Bridge., Equipment for Coffee Area. ~~[illegible]~~. update the building for driveup service-window install, Repair roof Sheetrock in that Area. Install new exterior doors for security. Add lighting to that Area. Buy coffee Machine, Install counter tops, Add chairs and tables for seating.

How does your proposed project help the City accomplish its goals and objectives?

Creates jobs, Adds Additional options for Community. Expand our business to create opportunity in our community.

Number of New Jobs Created: 7-9

What other relevant information would you like to share regarding your project and why it should be funded?

We Are making a long term investment to our business and the community. This will assist us as we partner with the City.

Will you be applying for or have you applied for other City grants? ☑ Yes ☐ No

If yes, which grant: Downtown Revitalization Amount: 26,500 When: 2021

PROJECT BUDGET (please attach any bids received for this project – if over $10,000)

ACTIVITY	CONTRACTOR/VENDOR	COST ESTIMATE
Water Heater	KIE	$ 21488
Work Table	Bargreen Ellingson	$ 275.00
Coffee Supplies	US FOODS	~~$ 671.19~~
Coffee Supplies	Amazon	~~$ 1050.92~~
Signage	Signs.com	$ 365.95
Coffee Supplies	Costco	~~$ 39.90~~
Coffee Supplies	Webstaurant	~~$ 983.48~~
Coffee Supplies	US FOODS	~~$ 202.00~~
Return Supplies	Shipping Solutions	~~$ 32.94~~
Business Filling (DEA)	nenbusinessfiling.org	$ 125.00
Coffee Beans	Javabeanplus.com	~~$ 87.86~~
Lotus (coffee supplies)	Lotus.com	~~$ 404.00~~
Espresso Machine	Highpockets Coffee	$ 6,820.00
Coffee Beans	Highpockets Coffee	~~$ 210.32~~
Glassware	Clearwater Gear	$ 1,006.47
Canva (Stampcards)	Canva.com	~~$ 19.00~~
Drive-Thru Remodel	Findley Brothers	$ 18,700.00
Coffee Bar Remodel	Home Depot	$ 887.74
Coffee Supplies	Webstuarant	~~$ 1,051.07~~
Electrical for Drive-Thru	Wildcat	$ 1,275.00
Additional tables & chairs	Bargreen Ellingson	$ 3414.28

Total: ~~$30,087.21~~ **$32,144.32**

We are seeking $ 27,500. for this project. **$24,108.24**

4667.89

PUBLIC INFORMATION NOTICE

All information submitted by Applicants shall be public records and subject to disclosure pursuant to the Oregon Public Records Act {ORS 192.410 et seq.}, except such portions for which Applicant requests exception from disclosure consistent with Oregon law. Any portion of a submittal that the Applicant claims constitutes a "trade secret" or is "confidential" must meet the requirements of ORS 192.501(2) and ORS 192.502(4). Applicant must clearly identify such material, by marking it "CONFIDENTIAL," and provide separate notice in writing of the status of this material to the official contact.

OWNER AUTHORIZATION (Only required if Applicant is not the property owner)

I, _____, am the owner of the property located at _____ in Umatilla, Oregon. I hereby give authorization for _____, the Applicant, to alter my building. I do not waive the right to review and approve any proposed project before it commences.

Name of Owner: _____

Signature of Owner: _____ // Date: _____

STATEMENT OF UNDERSTANDING AND CERTIFICATION BY APPLICANT

I, Darena Paulette Duffloth, {The Applicant} certify that I am authorized to sign on behalf of the Applicant entity. I understand that the City Council must approve the proposed project, with Notice of Award issued in writing, in order to be eligible for reimbursement. Certain changes or modifications may be required by CDD prior to final approval. A Notice of Award will not be issued before the CDD has received the necessary bids for the approved work. Any work started before the Notice of Award is issued may not be eligible for reimbursement. Furthermore, changes to the scope of work must be approved by CDD prior to initiating the work in order for that work to be eligible for reimbursement.

If approved, the applicant hereby authorizes the CDD, and those acting within the City's authority, to use before and after photographed images of this project, both in print and online.

The applicant certifies that all information in this application, and all information furnished in support of this application, is true and complete to the best of the Applicant's knowledge. Verification of any of the information contained in this application may be obtained by staff.

Name of Applicant: Darena Paulette Duffloth

Signature of Applicant: _____ // Date: 11-18-21

Google Maps Jane Ave

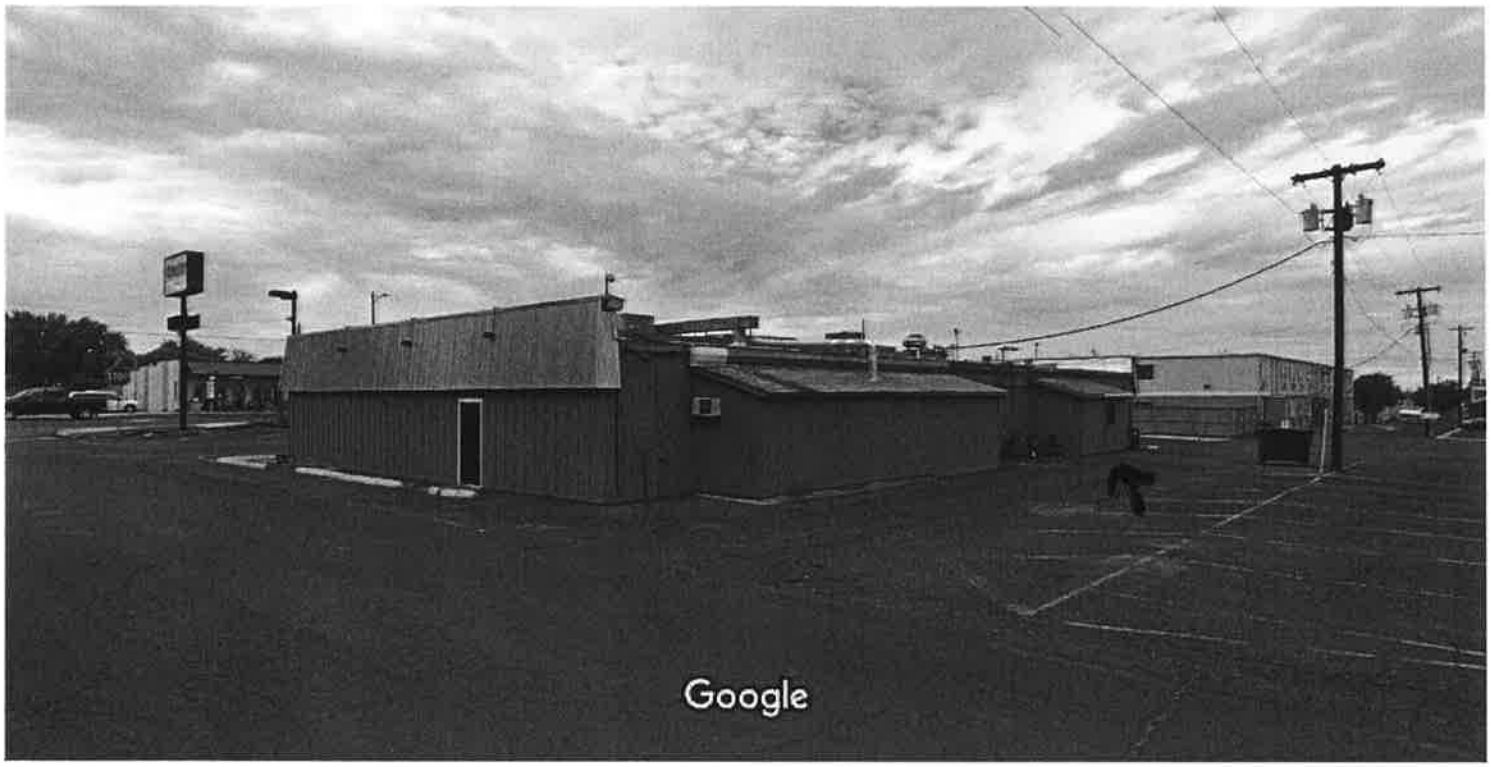

Image capture: Oct 2019 © 2021 Google

Umatilla, Oregon

Google

Street View - Oct 2019

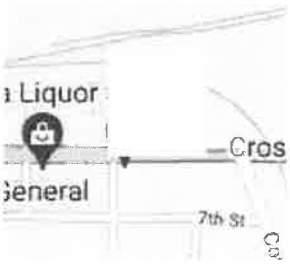

Rear area to be updated. Driveup window to be installed next to the door on the second alcove. New roof to be done on the two alcoves as well. And gutters and some siding replaced.

Findley Brothers Construction
1550 W Joseph Ave
Hermiston, OR 97838
CCB# 168277
WA FINDLBC44C2

Invoice

Date 9/20/2021
Invoice # 1028

Bill To	Ship To
Daren and Paulette Dufloth [redacted]	

P.O. #
Terms- D...

Ship Date 9/20/2021
Due Date 9/20/2021

Description	Amount
R&R 3 Exterior Doors, Open Exterior Wall Back of Restaurant for 5ft x 3ft window, insulate, Sheetrock, and install wood trim for drive thru window 1501 6th St Umatilla, OR 97882	14,260.00
Remove and Replace roof for drive thru window area	4,500.00

Past due accounts, over 30 days, are subject to a finance charge of 1 1/2% per month (18% per year)

Total	$18,760.00
Payments/Credits	-$10,000.00
Balance Due	$8,760.00

Findley Brothers Construction
findleybrothersconstruction@hotmail.com
541-567-3219
541-567-3219

FINDLEY BROTHERS CONSTRUCTION
CCB# 168277 WA# FINDLBC944C2
PHONE/FAX 541-567-3219
1550 W JOSEPH AVE.
HERMISTON OR 97838

Daren and Paulette Dufloth
Owners
The Bridge Bistro and Spirits
[redacted]

Dear Daren and Paulette:

We propose to furnish labor and materials for the following work to be performed.

Description: Remove and replace 3 exterior doors per locations discussed in walk through. Open exterior wall on the back of the building for a 5 ft x 3 ft xo window and install it for pickup orders. Remove and replace damaged t-111 siding on exterior of storage room. Insulate the exterior walls and ceiling of storage room in the same location of new window install. Install and finish sheetrock on the walls and ceiling of storage room. Remove existing asphalt shingle roof on storage room, remove and replace water damaged plywood, remove and replace water damaged fascia and rafters, and install new metal roof system to match existing metal roof system in front. Remove and replace gutters located on exterior wall of window location.

Our price for performing this work is $18,760.00. As soon as we have your approval, we can schedule to begin work on this job for you.

Exclusions: Electrical install and painting. If these items are needed we will get quotes from subs as needed.

This quote is good for 30 (thirty) days.

Sincerely,

Brandon Findley
Owner

LOCAL BUSINESS GRANT APPLICATION

Date Received: _____

BUILDING/BUSINESS NAME: Lite Em Up BBQ

ADDRESS: 1201 6th Street, Umatilla, OR 97882

Please include the following items to complete your application:

☑Application with Owner Authorization {if the Applicant is not the property owner}

☑Lease Agreement or Letter of Intent to Lease between property owner and tenant

☑" Before" photographs of the property

☑ Any architectural drawings, plans, elevations, or sketches related to this project {for construction projects}

☑Proof of funds needed to complete proposed project

☑Applicants W-9

APPLICANT INFORMATION

Name:	Lite Em Up BBQ/Rikkilynn Starliper	Property Address:	1201 6th Street, Umatilla, OR 97882
Mailing Address:	1201 6th Street, Umatilla, OR 97882		
Phone:	[redacted]		

PROPERTY OWNER INFORMATION (If different from Applicant)

Name:	Loyal Restoration, LLC	Property Address:	1201 6th Street, Umatilla, OR 97882
Mailing Address:	[redacted]		
Phone:	[redacted]	Email:	[redacted]

BUSINESS INFORMATION

Describe the business that occupies or will occupy the improved space. Please include hours of operation and the anticipated hours with the most customers/traffic:

Lite Em Up BBQ currently operates from 11:30-6:00 pm, Friday and Saturday. When we are open, we also serve as the till for Evangeline gift shop as all the businesses in the 1201 6th Street building work to support one another. Currently, our peak times are on Fridays and on Saturdays.

With the expansion and improvements possible with this grant, we will be open Monday-Thursday from 10:30-6:00 pm and 11:30-6:00 on Fridays and Saturdays. We anticipate our peak times will be 11:30-12:30 and 3:30-5:30 pm during the week days and 12-3 pm during weekends.

With the expansion possible with the grant, we will take over the space previously occupied by Fruteria Piqui (out of business) and offer a limited menu. We will provide snack, lunch and quick dinner options Monday-Thursday with items made from our more popular BBQ items. For example, we will offer personal sized and take-and-bake pizzas with our BBQ meats on them. We belive these items will compliment, but not directly compete, with other businesses in the downtown area.

About the Proposed Project

Described the proposed project:

These funds will be used to upgrade our equipment, update the flooring in the building, and connect the current kitchen to the new space. Specifically, we will purchase:
- Commercial smoker
- Commerical exhaust vent hood with fire suppression system
- Flooring- vinyl plank
- Concrete pad for smoker
- Updated electrical to support commercial equipment needs

How does your proposed project help the City accomplish its goals and objectives?

Improving the downtown business environment is important to the livability for the citizens of Umatilla. Having another option for meals during the day, and in the evening, will be a benefit to the broader community. In addition, our expanded hours also mean expanded hours for the gift shop which provides additional retail opportunities for the community.

We (Lite Em Up, Loyal Restoration and Evangeline) have been sponsors for local youth programs as well as Chamber of Commerce Members and donors for various community events and requests. We are thrilled to see the progress in Umatilla and are honored to be a part of the positive growth in our community.

Number of New Jobs Created: 3

What other relevant information would you like to share regarding your project and why it should be funded?

We appreciate the opportunity provided by this grant. The expansion, to the level described, will not be possible without such support. Thank you for this opportunity.

Will you be applying for or have you applied for other City grants? ☑Yes ☐No

If yes, which grant: Downtown Revitalization Amount: $7,304.23 from City, $2,286.00 in kind from owner, Total budget $9,590.23 When: January, 2020 Loyal Restoration, LLC

PROJECT BUDGET (please attach any bids received for this project – if over $10,000)

ACTIVITY	CONTRACTOR/VENDOR	COST ESTIMATE
Commercial Smoker	BigPoppas	$15,434
Exhaust Hood with Installation	Spokane Restaurant Equipment	$7,500
Electrical update to support commercial equipment	Shellco	$4,250
Concrete Pad Materials	Lite Em Up	$650
Concrete Pad Labor	Lite Em Up	$285.40
Flooring- Materials	Home Depot	$4,335
Flooring-Labor	Lite Em Up	$1,284.30
	TOTAL	$33,738.70

How much grant funding are you seeking for this project? (up to 75%): $25,304.03

PUBLIC INFORMATION NOTICE

All information submitted by Applicants shall be public records and subject to disclosure pursuant to the Oregon Public Records Act {ORS 192.410 et seq.}, except such portions for which Applicant requests exception from disclosure consistent with Oregon law. Any portion of a submittal that the Applicant claims constitutes a "trade secret" or is "confidential" must meet the requirements of ORS 192.501(2) and ORS 192.502(4). Applicant must clearly identify such material, by marking it "CONFIDENTIAL," and provide separate notice in writing of the status of this material to the official contact.

OWNER AUTHORIZATION (Only required if Applicant is not the property owner)

I, Heidi Sipe, am the owner of the property located at 1201 11th Street in Umatilla, Oregon. I hereby give authorization for Lite Em Up BBQ, the Applicant, to alter my building. I do not waive the right to review and approve any proposed project before it commences.

Name of Owner: Heidi Sipe, for Loyal Restoration, LLC

Signature of Owner: Heidi A Sipe // Date: 11-12-2021

STATEMENT OF UNDERSTANDING AND CERTIFICATION BY APPLICANT

I, Rikkilynn Starliper, {The Applicant} certify that I am authorized to sign on behalf of the Applicant entity. I understand that the City Council must approve the proposed project, with Notice of Award issued in writing, in order to be eligible for reimbursement. Certain changes or modifications may be required by CDD prior to final approval. A Notice of Award will not be issued before the CDD has received the necessary bids for the approved work. Any work started before the Notice of Award is issued may not be eligible for reimbursement. Furthermore, changes to the scope of work must be approved by CDD prior to initiating the work in order for that work to be eligible for reimbursement.

If approved, the applicant hereby authorizes the CDD, and those acting within the City's authority, to use before and after photographed images of this project, both in print and online.

The applicant certifies that all information in this application, and all information furnished in support of this application, is true and complete to the best of the Applicant's knowledge. Verification of any of the information contained in this application may be obtained by staff.

Name of Applicant: Rikkilynn Starliper

Signature of Applicant: Rikkilynn Starliper // Date: 11/12/21

City of Umatilla
PO Box 130
Umatilla, OR 97882

RE: Support for Lite Em Up Grant and Financial Commitment

November 12th, 2021

Dear Umatilla City Council,

We own the building at 1201 6th Street. We appreciate all the City has done to support businesses, including ours, in improving Umatilla. We are proud to support Lite Em Up BBQ in their application for the Local Business Grant. They have permission to modify the building as proposed in the grant application.

They have requested financial help in securing the up-front costs for this grant. We will be happy to provide the initial funding for them and have provided a letter from our Financial Advisor confirming our access to the funds. If there are any questions, we may be reached at [redacted]

Sincerely,

Kyle R. Sipe
Owner

Heidi A. Sipe
Owner

Location where concrete pad will be for commercial smoker

Current state of flooring

Venthood will be installed in ceiling here

Current smokers in use. Will be replaced with commercial smoker.

Cetera INVESTORS | Premier Client Group
SCOTT WEALTH MANAGEMENT

Carrie Scott, Investment Advisor Rep

9400 SW Beaverton-Hillsdale Hwy, Suite 250
Beaverton, OR 97005
Phone: 5034473591 | Mobile: 5032014455
Fax: 5032969071
HYPERLINK
"http://scottwealthmanagement.ceterainvestors.com"
http://scottwealthmanagement.ceterainvestors.com
carrie.scott@ceterainvestors.com

November 11, 2021

Dear City Council,

I have been working with Kyle and Heidi Sipe since 1997 with investments of their own while working for Umatilla School District, as well as other non-qualified money and college funds for the kids. As the financial advisor for Kyle and Heidi Sipe, owners of Loyal Restoration, LLC, I certify that they have available funds exceeding $35,000 for use at any time. Please reach out to me if you need anything else.

Sincerely,

Carrie Scott

Address: 860 West Elm Ave
PO Box 25
Hermiston, OR 97838
Phone: 541-567-5532
Fax: 541-567-7312
CCB# 02315

Job name: Loyal Restorations-Light em up BBQ

[redacted]

Date: 11/9/2021

Estimator: Brent Ottmar - brent@shelcoelectric.com

Scope of work:
Change out both load centers. Clean up wiring downstairs by extending circuits, adding support for circuits and re-routing circuits so t-bar ceiling can be put back up by customer. New load center will still be partialy surface mount. Devices wil be installed correctly in approved boxes. Junction boxes will be used properly with circuits entering thru approved knock outs. Perform grounding and bonding of load centers.

Includes:	**Cost:**
Materials, labor and electrical permit to perform the above task.	$4,250.00
Proposed Cost: **Quote Expires:**	**$4,250.00** **12/3/21**

Not Included:
Working after hours including weekends. Coaxial and communication cableing. Sheetrock repair or wood trim around load centers.

Terms: Payment net 30 days

Clause:
All material is guaranteed to be as specified and caries manufacture warranties. All work to be completed in a workmanlike manner according to standard practices and is warrantied for one year unless otherwise specified. Any alteration or deviation from above specifications involving extra costs will be executed only upon written orders, and will become an extra charge over and above the estimate. All agreements are contingent upon strikes, accidents or delays beyond our control. Property owner shall carry fire, tornado and other necessary insurance. Our workers are fully covered by Workmen's Compensation Insurance. ~ ***Thank you***

Authorized Signature: Brent C Ottmar

Note: *This proposal may be Withdrawn by us if not accepted with in 30 days from date listed above.*

Acceptance of Proposal:
The above prices, specifications and conditions are satisfactory and are hereby accepted. You are authorized to do the work as specified. Payment will be made as outlined above

Date of acceptance:

Please sign above and date. Fax or return to SHELCO Electric Inc. ~ ***Thank you****.*

SIGN IN

ESTIMATED TOTAL

$15,434.00

1

Sign In

Email Address *

Password *

Sign In

Forgot Your Password?

Shipping Address

Express Checkout

amazon pay

USE YOUR AMAZON ACCOUNT

Or continue below to pay with a credit card

Email Address *

You can create an account after checkout.

First Name *

Last Name *

Company

Street Address *

Zip/Postal Code *

City *

State/Province *

Please select a region

Country *

United States

Phone Number *

Fax

Shipping Methods

1 X Ole Hickory Pits CTO-DW

Shipping from - OHP Warehouse *

◉ $725.00 Lift Gate Delivery

Next

ORDER SUMMARY

1 Item in cart

Ole Hickory Pits CTO-DW

$14,709.00

Qty: 1

CTO-DW Smoker -

1 x Ole Hickory CTO - DW $13,329.00

Crating Fee -

1 x Ole Hickory Crating Fee $630.00

Upgrades -

1 x Ole Hickory Cook and Hold $750.00

Lead Time -

I understand that this smoker may take 16-20 weeks to ship

Gas Type - Natural Gas

Fire Basket - Wood Basket

LOCAL BUSINESS GRANT APPLICATION

Date Received: _____

BUILDING/BUSINESS NAME: Quality Inn Umatilla

ADDRESS: 705 Willamette st, Umatilla, OR 97882

Please include the following items to complete your application:

☐Application with Owner Authorization {if the Applicant is not the property owner}

☐Lease Agreement or Letter of Intent to Lease between property owner and tenant

☐" Before" photographs of the property

☐ Any architectural drawings, plans, elevations, or sketches related to this project {for construction projects}

☐Proof of funds needed to complete proposed project

☐Applicants W-9

APPLICANT INFORMATION

Name:	Robin Singh	Property Address:	705 Willamette st, Umatilla
Mailing Address:	Same as Property Address		
Phone:	[redacted]		

PROPERTY OWNER INFORMATION (If different from Applicant)

Name:		Property Address:	
Mailing Address:			
Phone:		Email:	

BUSINESS INFORMATION

Describe the business that occupies or will occupy the improved space. Please include hours of operation and the anticipated hours with the most customers/traffic:

Hotel

24 hours.

ABOUT THE PROPOSED PROJECT

Described the proposed project:

Update & Install the new Drapery in All Rooms.

How does your proposed project help the City accomplish its goals and objectives?

* Visually enhance the building
* Enhance the architectural features of guest Rooms.
* increase the occupancy of People

Number of New Jobs Created: _____

What other relevant information would you like to share regarding your project and why it should be funded?

Will you be applying for or have you applied for other City grants? ☐Yes ☒No

If yes, which grant: _____ Amount: _____ When: _____

PROJECT BUDGET (please attach any bids received for this project – if over $10,000)

ACTIVITY	CONTRACTOR/VENDOR	COST ESTIMATE
Drapery update	Ameritex International	28143.40
	TOTAL	$ 28,143.40

How much grant funding are you seeking for this project? (up to 75%) $21,107.55

PUBLIC INFORMATION NOTICE

All information submitted by Applicants shall be public records and subject to disclosure pursuant to the Oregon Public Records Act {ORS 192.410 et seq.}, except such portions for which Applicant requests exception from disclosure consistent with Oregon law. Any portion of a submittal that the Applicant claims constitutes a "trade secret" or is "confidential" must meet the requirements of ORS 192.501(2) and ORS 192.502(4). Applicant must clearly identify such material, by marking it "CONFIDENTIAL," and provide separate notice in writing of the status of this material to the official contact.

OWNER AUTHORIZATION (Only required if Applicant is not the property owner)

I, _____, am the owner of the property located at _____ in Umatilla, Oregon. I hereby give authorization for _____, the Applicant, to alter my building. I do not waive the right to review and approve any proposed project before it commences.

Name of Owner: _____

Signature of Owner: _____ // Date: _____

STATEMENT OF UNDERSTANDING AND CERTIFICATION BY APPLICANT

I, Robin Singh, {The Applicant} certify that I am authorized to sign on behalf of the Applicant entity. I understand that the City Council must approve the proposed project, with Notice of Award issued in writing, in order to be eligible for reimbursement. Certain changes or modifications may be required by CDD prior to final approval. A Notice of Award will not be issued before the CDD has received the necessary bids for the approved work. Any work started before the Notice of Award is issued may not be eligible for reimbursement. Furthermore, changes to the scope of work must be approved by CDD prior to initiating the work in order for that work to be eligible for reimbursement.

If approved, the applicant hereby authorizes the CDD, and those acting within the City's authority, to use before and after photographed images of this project, both in print and online.

The applicant certifies that all information in this application, and all information furnished in support of this application, is true and complete to the best of the Applicant's knowledge. Verification of any of the information contained in this application may be obtained by staff.

Name of Applicant: Robin Singh

Signature of Applicant: Rsin // Date: 11/12/2021

LOCAL BUSINESS GRANT APPLICATION

Date Received: 9-14-2021

BUILDING/BUSINESS NAME: Umatilla Speedwash, LLC

ADDRESS: 631 I Street, Umatilla Speedwash

Please include the following items to complete your application:

☐ Application with Owner Authorization {if the Applicant is not the property owner}

☐ Lease Agreement or Letter of Intent to Lease between property owner and tenant

☐ " Before" photographs of the property

☐ Any architectural drawings, plans, elevations, or sketches related to this project {for construction projects}

☐ Proof of funds needed to complete proposed project

☒ Applicants W-9

APPLICANT INFORMATION

Name:	Frendlin Pin	Property Address:	631 I Street
Mailing Address:	[redacted]		
Phone:	[redacted]		

PROPERTY OWNER INFORMATION (If different from Applicant)

Same

Name:		Property Address:	
Mailing Address:			
Phone:		Email:	

BUSINESS INFORMATION

Describe the business that occupies or will occupy the improved space. Please include hours of operation and the anticipated hours with the most customers/traffic:

Laundromat has broken machines would like to purchase new equipment. Current hours of operation are 24 hours/7 days a week. Most customers are anticipated in the morning during 7am-11am. and the evening around 5pm-10pm. I would like to purchase bigger equipment to help customers that have lots of laundry or two sets of twins like myself.

About the Proposed Project

Described the proposed project:

Purchase and install new 90lbs washer and 45lbs stack dryer. Start offering a new service to the community of wash & fold services.

How does your proposed project help the City accomplish its goals and objectives?

The goal is to rennovate the laundromat and hire laundromat attendant. Having a large capacity washer and dryer would help attract more bussiness to Umatilla.

Number of New Jobs Created: 1

What other relevant information would you like to share regarding your project and why it should be funded?

Umatilla speedwash has been in the community for many years and provides much needed services for our community. The new wash and dry services will help minimize Covid spred.

ARCHITECTURAL/MECHANICAL PRODUCT SPECIFICATIONS

ExpressDry Stack90

VENDED 45-POUND CAPACITY DUAL-POCKET DRYING TUMBLERS

CONTINENTAL GIRBAU
2500 State Road 44 • Oshkosh, WI 54904
920.231.8222 • FAX 920.231.4666
www.continentalgirbau.com

Capacity *lbs (kg)*	2 x 45 *(2 x 20.5)*
Cylinder Diameter *inch (mm)*	33 *(838)*
Cylinder Depth *inch (mm)*	30 *(762)*
Cylinder Volume *cu ft (dm³)*	14.8 *(419)*
Net Weight *lbs (kg)*	673 *(305)*
Crated Weight *lbs (kg)*	718 *(326)*
Machine Width *inch (mm)*	34.5 *(876)*
Machine Depth *inch (mm)*	48.62 *(1235)*
Machine Height *inch (mm)*	81.25 *(2064)*
Door Opening *inch (mm)*	26.89 *(683)*
Floor to Door *inch (mm)*	Top: 49.3 *(1252)*
Shipping Dimensions *inch (mm)* *(WxDxH)*	35.5 x 54 x 85 *(902 x 1372 x 2159)*
Motor Power *Hp (kW)*	2 @ 1/2 *(2 @ 0.37)*
Exhaust Diameter *inch (mm)*	10 *(254)*
Exhaust Air Flow *cfm (l/s)*	600 *(283)*
Gas Connection *inch (mm)*	1/2 NPT *(12.7)*
Gas Heating *BTU/h (Kcal/h)*	95000 per pocket *(23930 per pocket)*
Available Voltages/Wire Conductor/Amp	208-240/60/1, 2W+N+G, 12.0 200-208/60/3, 3W+G, 9.6 240/60/3, 3W+G, 9.6
Make-up Air Supply *inch² (cm²)*	144 *(929)*

* Specifications subject to change without notice or obligation. Call Continental Girbau Inc for dimensions not shown or for clarification.

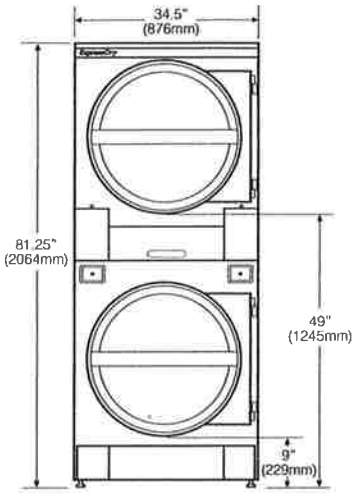

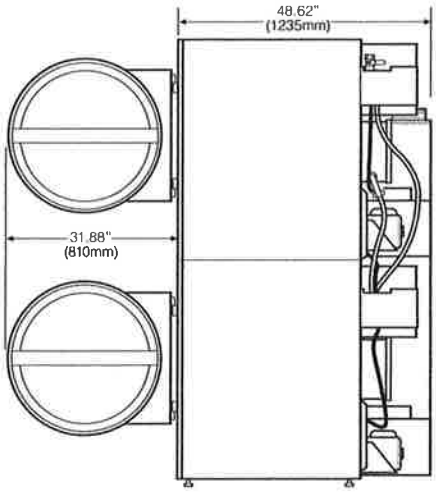

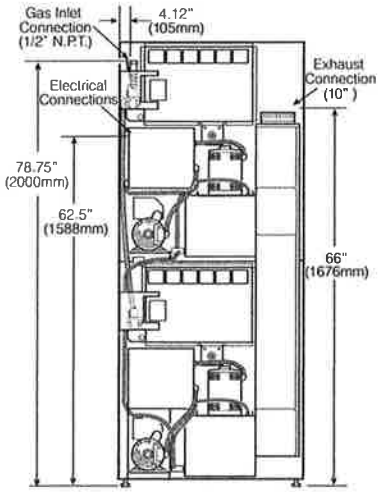

r2 08/15

ARCHITECTURAL/MECHANICAL PRODUCT SPECIFICATIONS

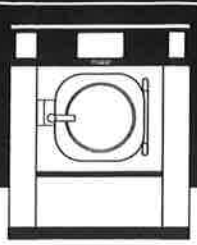

EH090

VENDED EXPRESSWASH 90-POUND CAPACITY HIGH-PERFORMANCE WASHER-EXTRACTOR

CONTINENTAL GIRBAU
2500 State Road 44 • Oshkosh, WI 54904
920.231.6222 • FAX 920.231.4666
www.continentalgirbau.com

Capacity *lbs (kg)*	90 *(39.5)*
Cylinder Diameter *inch (mm)*	35.4 *(900)*
Cylinder Depth *inch (mm)*	24.4 *(621)*
Cylinder Volume *cu ft (dm³)*	13.9 *(395)*
Net Weight *lbs (kg)*	3106 *(1409)*
Crated Weight *lbs (kg)*	3405 *(1544)*
Machine Width *inch (mm)*	54.7 *(1390)*
Machine Depth *inch (mm)*	57.3 *(1455)*
Machine Height *inch (mm)*	70.8 *(1798)*
Door Opening *inch (mm)*	22 *(558)*
Floor to Door *inch (mm)*	25.9 *(659)*
Shipping Dimensions *inch (mm)* *(WxDxH)*	59.8 x 62.2 x 79.9 *(1520 x 1580 x 2030)*
Washing Speeds *rpm*	40
Spin Speeds *rpm*	40/79/325/490/675/870
G-force	0.8/3.13/53/121/229/381
Static Force Transmitted *lbs (kg)*	3547 *(1609)*
Dynamic Force Transmitted *lbs (kg)*	556 *(252)*
Frequency of Dynamic Force *Hz*	14.5
Available Voltage/Wire Conductor/Amp	
Hot Water (standard)	208-240/60/3, 3W+G, 15 Amp
Hot Water (standard)	440-480/60/3, 3W+G, 10 Amp
Steam Auxiliary Heat (optional)	440-480/60/3, 3W+G, 10 Amp
Drain Diameter *inch (mm)*	3 *(76)*
Water Inlets *inch (mm)*	2 @ 1 *(25.4)*
Recommended Water Pressure *PSI (bar)*	30-60 *(2-4)*
Water Flow *gal/min (l/min)*	26 *(100)*
Total Power *kW*	4.8

* Specifications subject to change without notice or obligation. Call Continental Girbau Inc for dimensions not shown or for clarification.

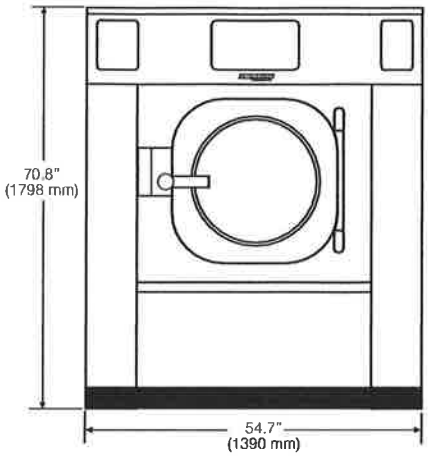

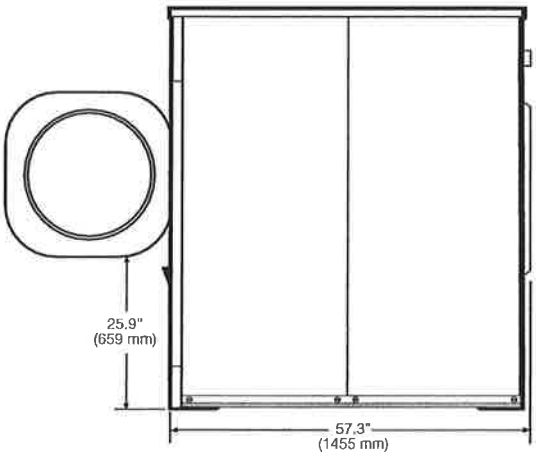

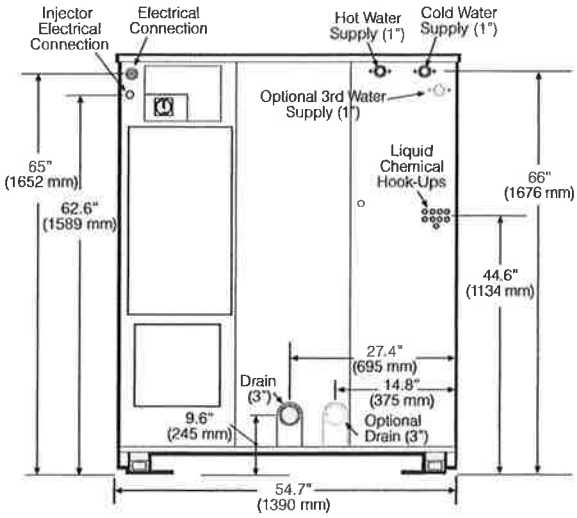

From: duane@integritylaundrysolutions.com
Sent: Tuesday, September 14, 2021 11:23 AM
To: [redacted]
Cc: Michael Tompkins
Subject: Pricing and technical specifications

Nellie,

Attached are specs for the two machines requested. Below is ballpark pricing for the units assuming 1 of each and installation by Integrity Laundry/Tompkins Appliance.

EH090 Vended: $38,435
KTT45 Stainless Vended: $14,315
Includes: Coin drops, coin boxes and extended 5 year parts warranty
Freight quote depending on order date and cannot be guaranteed

Installation services provided at $90/manhour plus materials needed to upgrade utilities if needed

Let me know if you have any questions or need further information,

Duane Tompkins
509-520-4494

Form **W-9**
(Rev. October 2018)
Department of the Treasury
Internal Revenue Service

Request for Taxpayer Identification Number and Certification

▶ Go to *www.irs.gov/FormW9* for instructions and the latest information.

Give Form to the requester. Do not send to the IRS.

Print or type. See Specific Instructions on page 3.

1 Name (as shown on your income tax return). Name is required on this line; do not leave this line blank.

Erendira Pin

2 Business name/disregarded entity name, if different from above

3 Check appropriate box for federal tax classification of the person whose name is entered on line 1. Check only **one** of the following seven boxes.

☑ Individual/sole proprietor or single-member LLC ☐ C Corporation ☐ S Corporation ☐ Partnership ☐ Trust/estate

☐ Limited liability company. Enter the tax classification (C=C corporation, S=S corporation, P=Partnership) ▶ _____

Note: Check the appropriate box in the line above for the tax classification of the single-member owner. Do not check LLC if the LLC is classified as a single-member LLC that is disregarded from the owner unless the owner of the LLC is another LLC that is **not** disregarded from the owner for U.S. federal tax purposes. Otherwise, a single-member LLC that is disregarded from the owner should check the appropriate box for the tax classification of its owner.

☐ Other (see instructions) ▶

4 Exemptions (codes apply only to certain entities, not individuals; see instructions on page 3):

Exempt payee code (if any) _____

Exemption from FATCA reporting code (if any) _____

(Applies to accounts maintained outside the U.S.)

[redacted] no.) See instructions.

Requester's name and address (optional)

7 List account number(s) here (optional)

Part I Taxpayer Identification Number (TIN)

Enter your TIN in the appropriate box. The TIN provided must match the name given on line 1 to avoid backup withholding. For individuals, this is generally your social security number (SSN). However, for a resident alien, sole proprietor, or disregarded entity, see the instructions for Part I, later. For other entities, it is your employer identification number (EIN). If you do not have a number, see *How to get a TIN,* later.

Note: If the account is in more than one name, see the instructions for line 1. Also see *What Name and Number To Give the Requester* for guidelines on whose number to enter.

Social security number

[redacted]

or

Employer identification number

☐☐ – ☐☐☐☐☐☐☐

Part II Certification

Under penalties of perjury, I certify that:

1. The number shown on this form is my correct taxpayer identification number (or I am waiting for a number to be issued to me); and
2. I am not subject to backup withholding because: (a) I am exempt from backup withholding, or (b) I have not been notified by the Internal Revenue Service (IRS) that I am subject to backup withholding as a result of a failure to report all interest or dividends, or (c) the IRS has notified me that I am no longer subject to backup withholding; and
3. I am a U.S. citizen or other U.S. person (defined below); and
4. The FATCA code(s) entered on this form (if any) indicating that I am exempt from FATCA reporting is correct.

Certification instructions. You must cross out item 2 above if you have been notified by the IRS that you are currently subject to backup withholding because you have failed to report all interest and dividends on your tax return. For real estate transactions, item 2 does not apply. For mortgage interest paid, acquisition or abandonment of secured property, cancellation of debt, contributions to an individual retirement arrangement (IRA), and generally, payments other than interest and dividends, you are not required to sign the certification, but you must provide your correct TIN. See the instructions for Part II, later.

Sign Here **Signature of U.S. person ▶** **Date ▶**

General Instructions

Section references are to the Internal Revenue Code unless otherwise noted.

Future developments. For the latest information about developments related to Form W-9 and its instructions, such as legislation enacted after they were published, go to *www.irs.gov/FormW9.*

Purpose of Form

An individual or entity (Form W-9 requester) who is required to file an information return with the IRS must obtain your correct taxpayer identification number (TIN) which may be your social security number (SSN), individual taxpayer identification number (ITIN), adoption taxpayer identification number (ATIN), or employer identification number (EIN), to report on an information return the amount paid to you, or other amount reportable on an information return. Examples of information returns include, but are not limited to, the following.

- Form 1099-INT (interest earned or paid)
- Form 1099-DIV (dividends, including those from stocks or mutual funds)
- Form 1099-MISC (various types of income, prizes, awards, or gross proceeds)
- Form 1099-B (stock or mutual fund sales and certain other transactions by brokers)
- Form 1099-S (proceeds from real estate transactions)
- Form 1099-K (merchant card and third party network transactions)
- Form 1098 (home mortgage interest), 1098-E (student loan interest), 1098-T (tuition)
- Form 1099-C (canceled debt)
- Form 1099-A (acquisition or abandonment of secured property)

Use Form W-9 only if you are a U.S. person (including a resident alien), to provide your correct TIN.

If you do not return Form W-9 to the requester with a TIN, you might be subject to backup withholding. See What is backup withholding, *later.*

PUBLIC INFORMATION NOTICE

All information submitted by Applicants shall be public records and subject to disclosure pursuant to the Oregon Public Records Act {ORS 192.410 et seq.}, except such portions for which Applicant requests exception from disclosure consistent with Oregon law. Any portion of a submittal that the Applicant claims constitutes a "trade secret" or is "confidential" must meet the requirements of ORS 192.501(2) and ORS 192.502(4). Applicant must clearly identify such material, by marking it "CONFIDENTIAL," and provide separate notice in writing of the status of this material to the official contact.

OWNER AUTHORIZATION (Only required if Applicant is not the property owner)

I, _____, am the owner of the property located at _____ in Umatilla, Oregon. I hereby give authorization for _____, the Applicant, to alter my building. I do not waive the right to review and approve any proposed project before it commences.

Name of Owner: Erendira Pin

Signature of Owner: Erendira Pin // Date: 10-12-2021

STATEMENT OF UNDERSTANDING AND CERTIFICATION BY APPLICANT

I, Erendira Pin, {The Applicant} certify that I am authorized to sign on behalf of the Applicant entity. I understand that the City Council must approve the proposed project, with Notice of Award issued in writing, in order to be eligible for reimbursement. Certain changes or modifications may be required by CDD prior to final approval. A Notice of Award will not be issued before the CDD has received the necessary bids for the approved work. Any work started before the Notice of Award is issued may not be eligible for reimbursement. Furthermore, changes to the scope of work must be approved by CDD prior to initiating the work in order for that work to be eligible for reimbursement.

If approved, the applicant hereby authorizes the CDD, and those acting within the City's authority, to use before and after photographed images of this project, both in print and online.

The applicant certifies that all information in this application, and all information furnished in support of this application, is true and complete to the best of the Applicant's knowledge. Verification of any of the information contained in this application may be obtained by staff.

Projects including funds for acquisition of real property must maintain ownership of said property for a term of five years from the Notice of Award. If transfer or sale of property occurs within five years applicant shall repay in full all funds used for acquisition of property to the City.

Name of Applicant: Erendira Pin

Signature of Applicant: Erendira Pin // Date: 10-12-2021

Will you be applying for or have you applied for other City grants? ☒Yes ☐No

If yes, which grant: Revitalization Amount: 21,328 When: October 2021

PROJECT BUDGET (please attach any bids received for this project – if over $10,000)

ACTIVITY	CONTRACTOR/VENDOR	COST ESTIMATE
EH090 washer	Integrity laundry	38435
KTT45 dryer	Integrity laundry	14,315
	TOTAL	$ ~~52751~~ $52,750

How much grant funding are you seeking for this project? (up to 75%): ~~49,172~~ $27,500

LOCAL BUSINESS GRANT APPLICATION

Date Received: _____

BUILDING/BUSINESS NAME: Umatilla Chamber of Commerce

ADDRESS: 100 Cline Ave. or PO Box 67, Umatilla Or.,

Please include the following items to complete your application:

☐Application with Owner Authorization {if the Applicant is not the property owner}

☐Lease Agreement or Letter of Intent to Lease between property owner and tenant

☐" Before" photographs of the property

☐ Any architectural drawings, plans, elevations, or sketches related to this project {for construction projects}

☐Proof of funds needed to complete proposed project

☐Applicants W-9

APPLICANT INFORMATION

Name:	Umatilla Chamber of Commerce	Property Address:	100 Cline Ave.
Mailing Address:	[redacted]		
Phone:	[redacted]	Email:	[redacted]

PROPERTY OWNER INFORMATION (If different from Applicant)

Name:	City of Umatilla	Property Address:	100 Cline Ave.
Mailing Address:	[redacted]		
Phone:	[redacted]	Email:	[redacted]

BUSINESS INFORMATION

Describe the business that occupies or will occupy the improved space. Please include hours of operation and the anticipated hours with the most customers/traffic:

The Umatilla Chamber of Commerce operates the Visitor Center which serves as our office and base of operation.
The Chamber/Visitor Center is open Monday thru Friday, 8:00 am to 5:00 pm.

About the Proposed Project

Described the proposed project:

Grant funding will allow us to update our office and visitor infrastructure to better serve both current and future clients, as well as the traveling public using the facility.
Updating our office furniture will not only make for a more efficient work space, but presents a professional image to clients and visitors. Staff will benefit from more modern energy efficient appliances.
Updating our lobby furniture and amenities for travelers will create a more welcoming environment.
Relocating the "Welcome to Oregon" sign will make it the first thing a visitor sees upon arriving at the Center. Many visitors seek out the sign for photo opportunities, and this will make it more accessible.

How does your proposed project help the City accomplish its goals and objectives?

The Chamber of Commerce is a key partner to the City in supporting tourism, providing the traveling public with information on Umatilla, Umatilla County and greater Oregon, and opportunities for recreation, increasing tourism revenue for local businesses.
Additionally, the Chamber's growing client base and increasing member meetings at the Chamber office requires us to present a modern, customer friendly appearance.

Number of New Jobs Created: 0

What other relevant information would you like to share regarding your project and why it should be funded?

Public Information Notice

All information submitted by Applicants shall be public records and subject to disclosure pursuant to the Oregon Public Records Act {ORS 192.410 et seq.}, except such portions for which Applicant requests exception from disclosure consistent with Oregon law. Any portion of a submittal that the Applicant claims constitutes a "trade secret" or is "confidential" must meet the requirements of ORS 192.501(2) and ORS 192.502(4). Applicant must clearly identify such material, by marking it "CONFIDENTIAL," and provide separate notice in writing of the status of this material to the official contact.

Owner Authorization (Only required if Applicant is not the property owner)

I, _____, am the owner of the property located at _____ in Umatilla, Oregon. I hereby give authorization for _____, the Applicant, to alter my building. I do not waive the right to review and approve any proposed project before it commences.

Name of Owner: _____

Signature of Owner: _____ // Date: _____

Statement of Understanding and Certification by Applicant

I, Mark Ribich, {The Applicant} certify that I am authorized to sign on behalf of the Applicant entity. I understand that the City Council must approve the proposed project, with Notice of Award issued in writing, in order to be eligible for reimbursement. Certain changes or modifications may be required by CDD prior to final approval. A Notice of Award will not be issued before the CDD has received the necessary bids for the approved work. Any work started before the Notice of Award is issued may not be eligible for reimbursement. Furthermore, changes to the scope of work must be approved by CDD prior to initiating the work in order for that work to be eligible for reimbursement.

If approved, the applicant hereby authorizes the CDD, and those acting within the City's authority, to use before and after photographed images of this project, both in print and online.

The applicant certifies that all information in this application, and all information furnished in support of this application, is true and complete to the best of the Applicant's knowledge. Verification of any of the information contained in this application may be obtained by staff.

Name of Applicant: Mark Ribich

Signature of Applicant: Mark Ribich // Date: 11/10/2021

Will you be applying for or have you applied for other City grants? ☐Yes ☒No

If yes, which grant: _____ Amount: _____ When: _____

PROJECT BUDGET (please attach any bids received for this project – if over $10,000)

ACTIVITY	CONTRACTOR/VENDOR	COST ESTIMATE
Desk	Office Depot	~~$1400~~
Fire Safe file cabinet	Office Depot	~~$1900~~
Printer Table	Office Depot	~~$200~~
PC Desk for Kiosk	Office Depot	$400
Coffee Bar	Walker's Furniture	$450
Guest Book Table	Walker's Furniture	$150
Staff Refrigerator	Home Depot	~~$1260~~
Staff Microwave	Home Depot	~~$159~~
Lobby Table &	Walker's Furniture	$700
Flag Pole Light Kits	Flags America	$120
Relocate Oregon Sign		$1500
Misc. supplies & items	Local suppliers as needed.	$500
	TOTAL	$ ~~$8389~~ $3,820

How much grant funding are you seeking for this project? (up to 75%): ~~$6291.75~~ $2,865

Form **W-9**
(Rev. October 2018)
Department of the Treasury
Internal Revenue Service

Request for Taxpayer Identification Number and Certification

▶ Go to *www.irs.gov/FormW9* for instructions and the latest information.

Give Form to the requester. Do not send to the IRS.

Print or type. See Specific Instructions on page 3.

1 Name (as shown on your income tax return). Name is required on this line; do not leave this line blank.
Umatilla Chamber of Commerce

2 Business name/disregarded entity name, if different from above
XUmatilla Chamber of Commerce and Visitor Center

3 Check appropriate box for federal tax classification of the person whose name is entered on line 1. Check only **one** of the following seven boxes.

☐ Individual/sole proprietor or single-member LLC ☑ Corporation ☐ S Corporation ☐ Partnership ☐ Trust/estate

☐ Limited liability company. Enter the tax classification (C=C corporation, S=S corporation, P=Partnership) ▶

Note: Check the appropriate box in the line above for the tax classification of the single-member owner. Do not check LLC if the LLC is classified as a single-member LLC that is disregarded from the owner unless the owner of the LLC is another LLC that is **not** disregarded from the owner for U.S. federal tax purposes. Otherwise, a single-member LLC that is disregarded from the owner should check the appropriate box for the tax classification of its owner.

☐ Other (see instructions) ▶

4 Exemptions (codes apply only to certain entities, not individuals; see instructions on page 3):

Exempt payee code (if any)

Exemption from FATCA reporting code (if any)

(Applies to accounts maintained outside the U.S.)

5 Address (number, street, and apt. or suite no.) See instructions.
[redacted]

Requester's name and address (optional)

Part I Taxpayer Identification Number (TIN)

Enter your TIN in the appropriate box. The TIN provided must match the name given on line 1 to avoid backup withholding. For individuals, this is generally your social security number (SSN). However, for a resident alien, sole proprietor, or disregarded entity, see the instructions for Part I, later. For other entities, it is your employer identification number (EIN). If you do not have a number, see *How to get a TIN*, later.

Note: If the account is in more than one name, see the instructions for line 1. Also see *What Name and Number To Give the Requester* for guidelines on whose number to enter.

Social security number
☐☐☐ – ☐☐ – ☐☐☐☐

or

Employer identification number
[redacted]

Part II Certification

Under penalties of perjury, I certify that:

1. The number shown on this form is my correct taxpayer identification number (or I am waiting for a number to be issued to me); and
2. I am not subject to backup withholding because: (a) I am exempt from backup withholding, or (b) I have not been notified by the Internal Revenue Service (IRS) that I am subject to backup withholding as a result of a failure to report all interest or dividends, or (c) the IRS has notified me that I am no longer subject to backup withholding; and
3. I am a U.S. citizen or other U.S. person (defined below); and
4. The FATCA code(s) entered on this form (if any) indicating that I am exempt from FATCA reporting is correct.

Certification instructions. You must cross out item 2 above if you have been notified by the IRS that you are currently subject to backup withholding because you have failed to report all interest and dividends on your tax return. For real estate transactions, item 2 does not apply. For mortgage interest paid, acquisition or abandonment of secured property, cancellation of debt, contributions to an individual retirement arrangement (IRA), and generally, payments other than interest and dividends, you are not required to sign the certification, but you must provide your correct TIN. See the instructions for Part II, later.

Sign Here Signature of U.S. person ▶ Mark Pulisit Date ▶ 11-18-2021

General Instructions

Section references are to the Internal Revenue Code unless otherwise noted.

Future developments. For the latest information about developments related to Form W-9 and its instructions, such as legislation enacted after they were published, go to *www.irs.gov/FormW9*.

Purpose of Form

An individual or entity (Form W-9 requester) who is required to file an information return with the IRS must obtain your correct taxpayer identification number (TIN) which may be your social security number (SSN), individual taxpayer identification number (ITIN), adoption taxpayer identification number (ATIN), or employer identification number (EIN), to report on an information return the amount paid to you, or other amount reportable on an information return. Examples of information returns include, but are not limited to, the following.

- Form 1099-INT (interest earned or paid)
- Form 1099-DIV (dividends, including those from stocks or mutual funds)
- Form 1099-MISC (various types of income, prizes, awards, or gross proceeds)
- Form 1099-B (stock or mutual fund sales and certain other transactions by brokers)
- Form 1099-S (proceeds from real estate transactions)
- Form 1099-K (merchant card and third party network transactions)
- Form 1098 (home mortgage interest), 1098-E (student loan interest), 1098-T (tuition)
- Form 1099-C (canceled debt)
- Form 1099-A (acquisition or abandonment of secured property)

Use Form W-9 only if you are a U.S. person (including a resident alien), to provide your correct TIN.

If you do not return Form W-9 to the requester with a TIN, you might be subject to backup withholding. See What is backup withholding, *later.*

The following pictures depict the current state of equipment and furniture.

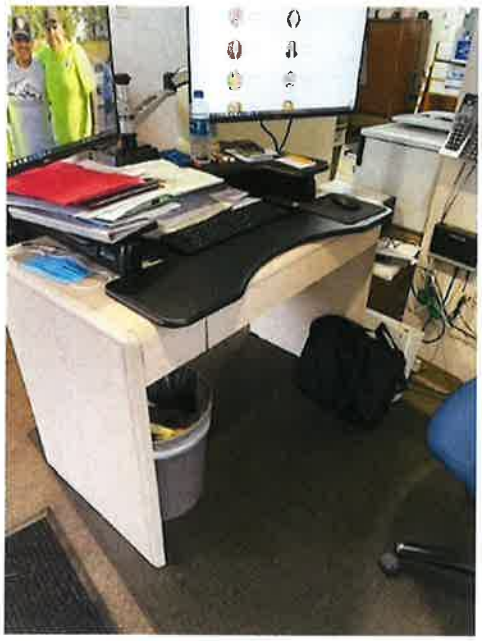

Current Directors Desk, no file storage, no PC compartment, exposed wiring.

Current Printer table is too low, and has no storage for supplies (paper, ink, etc.)
Note exposed PC and wiring on Directors desk.

Current file cabinet is not fire rated and has no lock.

Current staff mini fridge, coffee machine and microwave. Fridge and microwave were donated (used) many years ago.

Current Guest PC Kiosk, seating and Guest Book Table.

Current location of Welcome to Oregon Sign and desired location.

CITY OF UMATILLA, OREGON

AGENDA BILL

Agenda Title:	**Meeting Date:**
New Parks and Recreation Logo.	2021-12-07

Department:	**Director:**	**Contact Person:**	**Phone Number:**
Community Development	Brandon Seitz	Esmeralda Perches	

Cost of Proposal:	**Fund(s) Name and Number(s):**
N/A **Amount Budgeted:** 0	N/A

Reviewed by Finance Department:	**Previously Presented:**
No	N/A

Attachments to Agenda Packet Item:

Parks & Recreation Logo

Summary Statement:

As part of the City's effort to brand our parks and encourage increased participation in recreation and our programs, the Parks & Recreation Committee has worked together with staff and the community to create an all-new logo for our ever-expanding Parks & Recreation Department. Several logos have been considered over the past two years through the Committee's review process. This proposed new logo is recommended by the Committee and supported by staff. Staff seeks Council adoption of this new logo for use for our Parks & Recreation programs.

Motion to adopt new logo for the Parks and Recreation Department.

Consistent with Council Goals:

Goal 4: Increase Public Involvement, Create a Culture of Transparency with the Public, and Enhance Cultural Diversity.

UMATILLA

PARKS AND RECREATION

CITY OF UMATILLA, OREGON

AGENDA BILL

Agenda Title:	**Meeting Date:**
Cancellation of December 21, 2021 Workshop	2021-12-07

Department:	**Director:**	**Contact Person:**	**Phone Number:**
City Administration	David Stockdale	David Stockdale	

Cost of Proposal:	**Fund(s) Name and Number(s):**
$0 **Amount Budgeted:** $0	N/A

Reviewed by Finance Department:	**Previously Presented:**
Yes	N/A

Attachments to Agenda Packet Item:

Summary Statement:
Motion to Cancel the December 21, 2021 City Council Workshop

Consistent with Council Goals:
N/A

CITY OF UMATILLA, OREGON

AGENDA BILL

Agenda Title:	**Meeting Date:**
Planning Commission Yearly Report	2021-12-07

Department:	**Director:**	**Contact Person:**	**Phone Number:**
Community Development	Brandon Seitz	Jacob Foutz	

Cost of Proposal:	**Fund(s) Name and Number(s):**
NA **Amount Budgeted:** NA	N/A

Reviewed by Finance Department:	**Previously Presented:**
No	NA

Attachments to Agenda Packet Item:

Planning Commission Report 2021.pdf

Summary Statement:

November 2020-October 2021

Consistent with Council Goals:

N/A

PLANNING COMMISSION YEARLY REPORT

November 2020-October 2021

REPORT

November 2020 through October 2021

Number of Applications	Type of Application
4	Conditional Use
2	Subdivision (375 new lots approved)
4	Replat
1	Plan Amendment
1	Variance
0	Appeal
1	Zone Change
2	Extension of time
1	Annexation
16	**Total**

Summary

The following is a brief summary of some applications considered by the Planning Commission. The intent is to highlight some of the larger project underway or expected to start soon.

Conditional Use

- Umatilla Electric Cooperative- Conditional use to establish an 115KV transmission line and new substation.
- Powerline Storage LLC- Conditional use to establish and expand a self-storage facility.
- KC Nobles Enterprises LLC- Conditional Use to establish an RV Park.
- Fast Mart Umatilla Inc- Conditional Use for convenience store in the Downtown Commercial Zone.

Residential Development & Replats

- MonteVista- Application to establish a 326-lot subdivision on south hill above the canal.
- Columbia Basin Development- Application to establish a 49-lot subdivision on south hill.
- Parametrix- Application to replat lots in the port to allow for data center development.
- City of Umatilla- Application to combine 5 tax lots into 1 in preparation for a new Umatilla business center.

Legislative Changes

- MonteVista- Application to rezone two tax lots totaling 81.17 Acres from Single-Family Residential (R-1) to Medium-Density Residential (R-2) in connection with the MonteVista subdivision.